Design of a 2.45 GHz RF (Radio Frequency) Receiver in CMOS 45nm technology

Azad Hossain Saykat
Student Id: 021 221 017
Sazzad Hossen
Student Id: 021 221 026
Suvom Karmakar
Student Id: 021 221 027
Md. Tahman Hossain
Student Id: 021 221 099

A capstone project in the Department of Electrical and Electronic Engineering presented in partial fulfillment of the requirements for the Degree of Bachelor of Science in Electrical and Electronic Engineering

United International University
Dhaka, Bangladesh
March, 2026

Declaration

We, Azad Hossain Saykat, Sazzad Hossen, Suvom Karmakar, and Md. Tahman Hossain, declare that this project titled "Design of a 2.45 GHz RF (Radio Frequency) Receiver in CMOS 45nm technology" and the work presented in it are our own. We confirm that:

- This work was done wholly or mainly while in candidature for a BSc degree at United International University.
- Where any part of this project has previously been submitted for a degree or any other qualification at United International University or any other institution, this has been clearly stated.
- Where we have consulted the published work of others, this is always clearly attributed.
- Where we have quoted from the work of others, the source is always given. With the exception of such quotations, this project is entirely our own work.
- We have acknowledged all main sources of help.
- Where the project is based on work done by ourselves, we have made it clear exactly what was done by others and what we have contributed by ourselves.

Saykat

Azad Hossain Saykat, 021 221 017, Dept. of EEE

Sazzad hossen

Sazzad Hossen, 021 221 026, Dept. of EEE

Suvom.

Suvom Karmakar, 021 221 027, Dept. of EEE

Md. Tahman Hossain, 021 221 099, Dept. of EEE

Certificate

I do hereby declare that the works embodied in this project entitled "**Design of a 2.45 GHz RF (Radio Frequency) Receiver in CMOS 45nm technology**" is the outcome of an original work carried out by Azad Hossain Saykat, Sazzad Hossen, Suvom Karmakar, and Md. Tahman Hossain under my supervision.

I further certify that this report meets the requirements and the standard for the degree of BSc in Electrical and Electronic Engineering.

19/11/25

Dr. Raqibul Mostafa, Professor, Dept. of EEE
United International University

19/11/25

Md. Hasanuzzaman, Associate Professor, Dept. of EEE
United International University

Abstract

The demand for small and power-efficient wireless systems has led to the development of ultra-integrated radio frequency (RF) receiver architectures. This work describes the design & simulation of a complete 2.45 GHz CMOS RF receiver in 45 nm technology. The architecture of the device includes a series of building blocks including low-power RF signals pass through the following stages: amplification, frequency conversion and filtering. To implement a circuit-level performance analyze, we designed and simulated the whole circuit in Cadence Virtuoso. The gain of the receiver is 400 (50 dB), THD is 1.319% and lower power with consumption of 6.261mW. The combination of these results demonstrates a balance between gain, linearity and the power efficiency achieved, which further validates the proposed design for use in 2.45 GHz industrial, scientific and medical (ISM) band wireless communication applications. The receiver performance was evaluated through simulation to ensure compliance with RF receiver specifications.

Acknowledgement

We are truly grateful to everyone who has supported us in our Capstone Project, “Design of a 2.45 GHz RF (Radio Frequency) Receiver in CMOS 45nm technology.” We are greatly appreciative of our respected supervisors, Dr. Raqibul Mustafa, sir and Md. Hasanuzzaman, sir whose skillful supervision, patience, and encouragement have been an enormous help to us in getting this early-stage right. They have tremendously contributed to the development of our research agenda and provided us with wise advice. We express our gratitude to United International University and the Department of Electrical and Electronic Engineering for providing us with necessary resources and a stimulating academic milieu that helped our progress. We are also aware that our current project is the result, to some degree, of other studies and previous research that have inspired us and opened our eyes. Our search is the basis for all Newly published work we make on our site. In consensus, we sincerely thank our collaborators and colleagues for their help, and our family members and friends for motivating us to face adversities during this journey.

Table of Contents

LIST OF TABLES ix

LIST OF FIGURES x

1. Introduction 1

1.1 Background 1

1.2 Motivation 1

1.3 Problem Statement 2

2. Background and Literature Review 3

2.1 Low-Noise Amplifiers (LNA) and Band-Pass Filters (BPF) 3

2.2 Mixers and Phase-Locked Loops (PLL) 4

2.3 Low-Pass Filters (LPF) 5

2.4 Optimization Techniques and System-Level Approaches 5

2.5 Summary of Reviewed Literature 6

3. Methodology 7

3.1 Systematic Overview 7

3.2 System Block Architecture 7

3.3 Design of RF Receiver Sub-blocks 8

3.3.1 Band Pass Filter (BPF) 8

3.3.2 Low Noise Amplifier (LNA) Design 12

3.3.3 Mixer 18

3.3.4 Low Pass Filter (LPF) 22

3.4 Integrated RF Receiver Block 32

3.4.1 System Architecture and Integration 32

3.4.2 Inter-Stage and I/O Impedance Matching Methodology 32

4. Results 35
4.1 Band Pass Filter (BPF) 35
4.1.1 Schematic Design 35
4.1.2 DC Analysis 35
4.1.3 AC Analysis 37
4.2 Low Noise Amplifier (LNA) 38
4.5.1 Schematic Design 38
4.3.2 AC Analysis 39
4.3.3 Transient Analysis 40
4.3.4 S-Parameter Analysis 41
4.3.5 Stability & Noise Figure Analysis 41
4.3.6 Analysis 42
4.3 Mixer 43
4.4.1 Schematic Design 43
4.3.2 Mixer with Low Pass Filter (LPF) 43
4.3.3 Test Bench 44
4.3.4 Transient Analysis for Mixer 45
4.3.5 Mixer with Low Pass Filter (LPF) Analysis 46
4.3.6 Voltage Conversion Gain vs LO Signal Power 46
4.4 Low Pass Filter (LPF) 47
4.4.1 Schematic Design of Passive Filter 47
4.4.2 Transient Analysis of Passive LPF 47
4.4.3 AC Analysis of Passive LPF 48
4.4.4 Schematic Design of 1st Order Active LPF 49
4.4.5 Transient Analysis of Active LPF 49

4.4.6 AC Analysis of Active 1st Order LPF 50

4.4.7 Schematic Design of 2nd Order Active LPF 50

4.4.8 AC Analysis of Active 2nd Order LPF 51

4.5 Integrated RF Receiver Analysis 51

4.5.2 Time-Domain (Transient) Analysis 52

4.5.3 Frequency-Domain (DFT) Analysis 54

4.5.4 System Linearity and SNR 55

4.5.5 System Selectivity and Interference Rejection (FDM Analysis) 56

4.5.6 Time-Domain (Transient) Signal Recovery 58

4.5.7 I/Q (In-phase & Quadrature) Demodulation Architecture 59

4.5.8 Single Tone I/Q Transient Response 60

4.5.9 Gain and Phase Error Verification 61

4.5.10 Digital Modulation Recovery: QPSK Analysis 62

4.6 Comparison Table 65

5. Evidence of Complex Engineering Problem and PO Mapping 67

5.1 Complex of Engineering Problem 67

5.1 PO Mapping 69

6. Conclusion 74

7. References 75

8. Appendix A 77

List of Abbreviations 77

List of Symbols 78

LIST OF TABLES

Table 1: Summary of Key Literature Contributions 6

Table 2: BPF Calculation Table 10

Table 3: BPF Biasing Voltage 11

Table 4: Low Noise Amplifier (LNA) Specification 14

Table 5: Mixer Design Specifications 20

Table 6: Low Pass Filter (LPF) Specification 25

Table 7: Specification for Active Low Pass Filter 29

Table 8: LNA Specification vs Simulation Results 42

Table 9: Comparison Table with Previous Work 65

Table 10: Complex Problem (P) Mapping 67

Table 11: PO Mapping 69

LIST OF FIGURES

Figure 1.1: Proposed Block Diagram of the RF Receiver System 2

Figure 3.1: RF Receiver Design Model 7

Figure 3.2: BPF Schematic Diagram 9

Figure 3.3: Cascode Stage with Inductive Source Degeneration 12

Figure 3.4: Single Stage with Inductive Source Degeneration 13

Figure 3.5: Developing the Gilbert Cell Circuit [16] 19

Figure 3.6: Mixer Schematic Diagram 20

Figure 3.7: 7th Order Passive Low Pass Filter Prototype 22

Figure 3.8:Coefficients of the Chebyshev lowpass prototype filter normalized to 1 rad/s corner frequency and 1 Ω impedance [18] 23

Figure 3.9: Filter Order Calculation Formulas 24

Figure 3.10: 5 Transistor OTA 28

Figure 3.11: Block Diagram of 1st Order LPF 28

Figure 3.12: 1st Order Low Pass Filter Schematic Diagram 29

Figure 3.13: Gm-C 2nd Order Low Pass Filter Block Diagram 31

Figure 3.14: 2nd Order Low Pass Filter Schematic Diagram 31

Figure 4.1: Schematic Design of the BPF 35

Figure 4.2: [a][b][c][d] DC Analysis of BPF 37

Figure 4.3: Center Frequency at 2.45GHz 37

Figure 4.4: 3dB Point 38

Figure 4.5: Schematic Design of the LNA 38

Figure 4.6: DC Analysis of the LNA 39

Figure 4.7: AC Schematic of the LNA 39

Figure 4.8: Maximum Gain at 2.45GHz 40

Figure 4.9: Time varying Signal (Input 1mV Signal).....40

Figure 4.10: S11, S12. S21, S22 Waveform.....41

Figure 4.11: Noise figure (dB) = 2.3 dB & Kf =3.27 42

Figure 4.12: Schematic Design of the Mixer.....43

Figure 4.13: Schematic Design of the Mixer with Low pass Filter.....44

Figure 4.14: Mixer Simulation Test Bench 44

Figure 4.15: [a][b] Transient Analysis for Mixer 45

Figure 4.16: Transient Analysis of Mixer with Passive LPF.....46

Figure 4.17: Voltage Conversion Gain vs LO Signal Power.....46

Figure 4.18: 7th Order Passive Low Pass Filter Circuit Design.....47

Figure 4.19: Transient Analysis of Passive LPF 48

Figure 4.20: Figure 4.20: AC Analysis of Passive LPF Filter.....48

Figure 4.21: Schematic Design of 1st Order Active Filter 49

Figure 4.22: Transient waveform 49

Figure 4.23: AC Analysis of Active LPF Filter.....50

Figure 4.24: Schematic Design of 2nd Order Active Filter.....50

Figure 4.25: AC Analysis of 2nd Order Active LPF Filter 51

Figure 4.26: Schematic Design of the System.....51

Figure 4.27: Inserting Modulated Signal 52

Figure 4.28: [a][b][c] Transient Analysis 53

Figure 4.29: DFT Analysis 54

Figure 4.30: PSD Analysis 55

Figure 4.31: Linearity Analysis 56

Figure 4.32: Transient Analysis.....57

Figure 4.33: DFT Analysis 58

Figure 4.34: Transient Analysis.....59

Figure 4.35: Schematic Design of the I/Q Structure.....59

Figure 4.36: Transient Analysis of Single Tone Test.....60

Figure 4.37: Lissajous Pattern 61

Figure 4.38: Transient Analysis of QPSK 62

Figure 4.39: Transient Analysis.....62

Figure 4.40: Lissajous Pattern for QPSK 63

Figure 4.41: Eye Diagram.....64

Chapter1

1. Introduction

1.1 Background

An RF receiver is a central component in wireless communication systems that captures and converts EM signals into baseband signal suitable for processing. The RF receiver involves important circuits such as LNA, BPF, Mixer and LPF that must operate in order to preserve the signal characteristics over a wide frequency range and simultaneously cancel noise and interference. In wireless LAN, Bluetooth, 5G and IoT receiver implementation becomes more challenging, due to the demand for small size, low power and high-performance design [1][2]. For instance, in WLAN context, the power and area limitations are particularly challenging under the mobile and battery-operated nature [1]. Furthermore, if not properly addressed, direct conversion architecture is suffered from LO leakage, DC offsets and flicker noise which could degrade receiver performance though it is benefits for integration [1] [3]. The LNA is a key component in a receiver, as it directly influences the system's sensitivity. A careful balance of gain, noise figure (NF), input matching and linearity must be made in its design [2]. Preserving the signal integrity while trying to avoid interference and power consumption across all the RF front-end circuits is still a challenging task especially due to move toward systems that will need to operate under larger bandwidths and multiple coexisting signals [4][3].

1.2 Motivation

Wireless communication is an integral component of modern-day life, especially for Wi-Fi, Bluetooth, IoT devices, and short-range communication systems using 2.45 GHz frequency. As the size of electronic devices is getting smaller and more portable, the need for RF receivers is also on the rise. RF receivers need to be small, low power, and highly integrated using the CMOS process [5][4][2]. Designing RF receivers using 45 nm technology is a challenge because the supply voltage is low, the leakage current is high, and the noise sensitivity is also high. It is a challenge to receive weak signals with a high level of gain and linearity. This project is based on the need to design an efficient RF

receiver architecture with the ability to receive weak signals with a high level of gain and linearity while consuming low power.

1.3 Problem Statement

The key point in the RF receiver systems from the design perspective is how to maintain a high signal integrity and low loss between all critical components: LNA, BPF, Mixer LO, LPF. All these stages must be carefully integrated to ensure strong performance, a low noise figure (NF), efficient frequency conversion, and optimized power consumption. The present receiver designs frequently are unable to preserve the integrity of a signal throughout succeeding stages, particularly in high interference or low power conditions. The incomplete noise cancellation, the non-linear active device and unmatched wave impedances for these circuits are some of the issues causing performance degradation and signal distortion. This project aims to develop an RF receiver system with enhanced architectural efficiency by maximizing the performance associated to every processing stage, including the LPF for baseband signal conditioning when necessary. The requirement is to provide a reliable signal reception with increasing power efficiency, frequency agility and immunity against jammers for advanced applications such as 5G communication, IoT networks and smart systems [5][1][3]. Figure 1.1 presents the system architecture of the proposed RF receiver. The diagram below illustrates the representation of the design strategy which has been followed in this work, with an illustrated signal chain and functional integration of all key elements.

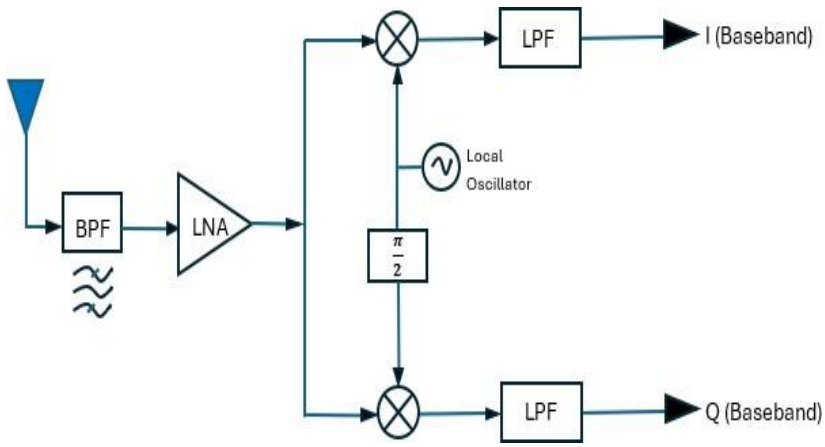

Figure 1.1: Proposed Block Diagram of the RF Receiver System

Chapter 2

2. Background and Literature Review

The evolution of wireless communication standards, particularly 5G, IoT, Bluetooth Low Energy (BLE), and Intelligent Transportation Systems (ITS), has driven the need for RF receivers that can offer higher sensitivity, wider bandwidth, lower power consumption, and better interference immunity. In such systems, the RF receiver: is a crucial element in the overall system performance, specifically sensitivity, selectivity and linearity as well as for the transmitted signal quality on noisy channels. A traditional RF receiver includes a number of functional blocks, such as the BPF to which the channel is selected, an LNA that amplifies weak signals, a Mixer (typically controlled with a Phase-Locked Loop) for frequency transformation and LPF after downscale for out- band rejection. In this chapter, the literature related to each block is presented and current integrated and optimization-oriented approaches are described that have been proposed in only few last years to improve receiver performance under contemporary challenges.

2.1 Low-Noise Amplifiers (LNA) and Band-Pass Filters (BPF)

Being the first active stage in a receiver chain, the Low-Noise Amplifier (LNA) has significant impact on the noise figure (NF) of the overall system. High gain, low noise figure, good impedance matching and linearity are demanded for the LNA with minimum DC offset to improve system performance. According to [1], this becomes challenging in direct-conversion receivers, where the LNA is also required to mitigate local oscillator (LO) leakage and flicker noise.

In a practical case,[2] the LNA design of 5.9 GHz for ITS using pHEMT technology was presented. This design obtained an 18 dB gain and a 2 dB noise figure (NF) based on low power consumption amounting to 30 mW only. This work emphasizes the necessity for LNA designs in challenging applications where low power and high signal integrity are of critical importance. For the compact low-power applications [5] presented a 2.4GHz 24 dBm CMOS LNA for BLE application. The design utilized inductive source degeneration and current reuse methods, and the gain, noise figure, bandwidth was 17.1 dB at the center

frequency, 1.9 dB at the same frequency, and 2 GHz, respectively, with a 1.8 V power supply.

In the study, [6] suggested a cascode common-source LNA with inductive degeneration, implemented in 65 nm CMOS and delivering operation at 2.4 GHz. The design attained a power gain of 25 dB and a noise figure (NF) of 2.6 dB and very good input/output impedance matching with an input return loss (S11) of 15.1 dB and an output return loss (S22) of 16.2 dB. These attributes also render the LNA ideal for wireless applications, such as IEEE 802.15.4, which is among the most widely used versions of ZigBee most popular incarnations. The design was functioned with a supply voltage of 1V and the system's performance was verified by simulation with Cadence Virtuoso Spectra RF tools.

Band-Pass Filters (BPF) are necessary as an integral part to maintain proper operation of the receiver by not amplifying out-of-band signals. This increases the selectivity and adjacent channel interference immunity [7] proposed N-path filters as a modifiable low power alternative well suited for mixer-first receiver architectures, which co-designs the filtering and frequency converting stages. These filters bring significant advantages in terms of frequency agility which is essential for software-defined radios. Additionally, [8] investigated the application of reconfigurable N-path filters in multiband RF front-ends. Though such filters improve the tunability, there are trade-offs compared to conventional designs observed by the authors like insertion loss and out-of-band rejection that still need further investigation.

A relevant contribution in BPF design is given by [9], which proposed a 2.5 GHz low-power active bandpass filter with a high Q factor. They focus on the implementation of reliability and performance improvements, employing VDTA (Voltage Differencing Transconductance Amplifier) for better selectivity and low power consumption. The proposed active bandpass filter solution caters to the emerging demand for low-power, high-performance filters in contemporary communication systems.

2.2 Mixers and Phase-Locked Loops (PLL)

The mixer down converts RF signals to a lower intermediate or baseband frequency [1] investigated mixer design influence over the entire receiver sensitivity, and extricated conversion gain, isolation, LO leakage and linearity as key figures-of-merit. He also

addressed the effect of flicker noise and DC offsets in direct conversion architectures [2] used an active mixer included their LNA design for ITS systems. They achieved a conversion gain of 12 dB and a noise figure (NF) of 5.8 dB at the frequency 2.45 GHz, balancing power efficiency with linearity and harmonic suppression. For mixer performance it is crucial that the LO signal be noise and jitter free, and a PLL is generally used to ensure this [4], we proposed an integrated system level design approach considering LO generation and distribution as part of receiver design. They focus on the minimization of phase noise that PLLs generate for coherent mixing, especially in mmWave [7] has proposed to combine PLL with N-path filters in mixer topologies as a means of reducing the front-end complexity. However, although good performance with respect reconfigurability is achieved, intermodulation distortion and harmonic leakage are challenges yet to be tackled.

2.3 Low-Pass Filters (LPF)

Despite its apparent simplicity, the LPF is a key part of RF receivers, especially after the mixer. It eliminates undesired harmonics and mixing products for an improved signal-to-noise ratio at baseband. However, there is also a profound lack of attention given to it [1] stated that a bad LPF design will cause errors in passband ripple and group delay, thus deteriorating the overall signal integrity. Likewise, in [10], these LPFs were described to be involved in the adjacent-channel suppression and selectivity, however no tunable or adaptive design was reported. A novel perspective is provided by [3], that showed that the co-optimization of LPF features using a Circuit-Centric Genetic Algorithm (CCGA) together with other receiver blocks improved, significantly, NF, gain and power efficiency. Their work paves way for adaptive LPFs that can dynamically adapt to the spectral conditions without adding to system power.

2.4 Optimization Techniques and System-Level Approaches

Despite extensive design in these areas, they typically do so on a block-by-block basis, but recent research is moving towards co-designing across the receiver chain [3] introduced a genetic optimization method (CCGA) capable of exploring the complex multi-dimensional design space for RF circuits. It offers a high design efficiency, while preserving important trade-offs in power, noise and gain. In addition, [4] proposed a PDK-integrated system-level strategy that captures layout constraints, electrical behavior and parasitic within the

design flow. Their architecture drastically speeds up the design of a receiver for mmWave coding. In the area of power constraint domains, [11] presented a 2.4GHz transceiver that is optimized for IoT and BLE markets. Their work shows that efficient system partitioning and architecture selection can both reduce the energy consumed by a receiver while maintaining its correctness.

2.5 Summary of Reviewed Literature

Table 1: Summary of Key Literature Contributions

Ref	Focus Area	Key Highlights and Limitations
[1]	LNA, Mixer, PLL, LPF	Direct-conversion challenges, NF, LO leakage suppression, group delay issues
[2]	LNA and Mixer for ITS	pHEMT-based LNA (18 dB gain, 2 dB NF), active mixer (12 dB gain)
[3]	Optimization (CCGA)	Multi-objective genetic tuning improves NF, gain, power efficiency
[4]	System-Level Methodology	Unified RF design flow with LO/PLL integration and mmWave focus
[5]	BLE/IoT LNA Design	Compact, low-voltage LNA (1.9 dB NF, 17.1 dB gain)
[11]	IoT Transceiver Architecture	2.4 GHz energy-efficient transceiver for smart environments
[7]	N-Path Filters / Mixer-First	Embedded filtering and mixing, highly tunable for reconfigurable radios
[8]	Multi-Band Topologies	N-path filters in dynamic environments, reconfigurable filtering
[12]	Architectural Framework	Foundation for LNA-mixer integration, topological design choices
[10]	RF Circuit Fundamentals	Overview of BPF, LNA, and LPF contributions to receiver performance
[6]	LNA Design (65 nm CMOS)	Cascode common-source LNA with inductive degeneration, 25 dB gain, 2.6 dB NF; limitations include power consumption and scalability issues.
[9]	BPF Design (Active Filter)	A 2.5 GHz low-power, high-Q active bandpass filter designed using VDTA technology; emphasizes reliability and performance; limitations include scalability and integration complexity.

Chapter 3

3. Methodology

3.1 Systematic Overview

The approach taken for the proposed RF receiver is based on a modular and progressive design philosophy. The main target is to implement a low-power receiver front-end designed for the 2.45 GHz ISM band. consumption, high sensitivity and aggressive selectivity appropriate for advanced wearable wireless and IoT devices. The design is following a direct- conversion (homodyne) architecture with the objective to obtain simplicity, compactness and efficient integration.

The process will start with an extensive review of the literature to derive established design benchmarks and performance targets for each of the receiver blocks. The methodology will be integrated method to include architectural planning as well as early-specification definition followed by schematic and simulation-driven polishing, leading towards physical verification etc. that provide a scalable/robust design process which can be adapted to varying needs.

3.2 System Block Architecture

The receiver to be designed works on the principle of homodyne (direct-conversion) receiver which directly down-converts the in-coming RF signal into baseband with no IF stages. The signal flow is illustrated in Figure 3.1.

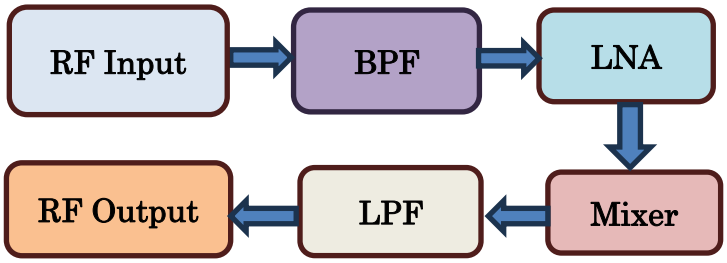

Figure 3.1: RF Receiver Design Model

Working Principle of RF Receiver Blocks:

- The BPF will select the desired channel and suppress out-of-band noise.
- The LNA will amplify weak signals while minimizing noise figure and maintaining linearity.
- The Mixer, driven by a local oscillator (LO), will directly down-convert the selected RF signal to baseband.
- The LPF will remove unwanted high-frequency products, ensuring that only the desired baseband signal is passed forward.

3.3 Design of RF Receiver Sub-blocks

The RF receiver presented will be implemented as a modular front- end architecture where each block is designed for high performance, integration and manufacturability. The design sequence and rationale for each component are as follows:

3.3.1 Band Pass Filter (BPF)

The BPF will be implemented immediately after the antenna to enforce channel filtering and effective suppression of unwanted signals. The filter will be designed to achieve low insertion loss, high selectivity, and a flat passband response appropriate for the target frequency band.

Architectural Topology

A 2.45 GHz bandpass filter is designed using a 45 nm CMOS process with a gyrator-based active inductor for minimum area and resistive loss. The fully differential configuration is employed for balanced operation and suppression of common mode noise. The LC tank is realized using transistor parasitic capacitances, and the inductance is realized using a trans conductor-based gyrator configuration. The input stage is a voltage-to-current converter for the tank excitation, and the frequency is tuned using the control voltage.

g_m/I_D Design Methodology

Compared to its initial counterpart, a 180 nm CMOS reference design, going down to process node of 45 nm required a structured optimization approach for transistors. A g_m/I_D methodology was implemented to aid device sizing and bias decision making in terms of transconductance efficiency as opposed to traditional scaling rules. This is applied to accurately control gain, bandwidth, and the power consumption that plays a crucial role in deep-submicron technologies constrained by short-channel effects along with intrinsic gain reduction. By judiciously choosing appropriate g_m/I_D operating regions, the design adequately meets transit frequency (f_T) and performance requirements whilst continuing with power efficient functioning, consisted with RF CMOS design [13].

Schematic Diagram

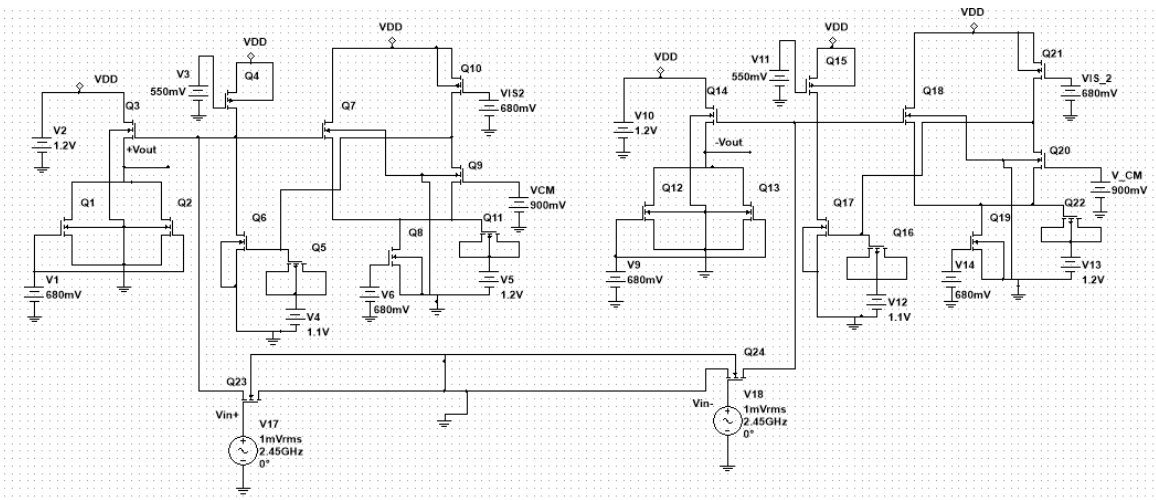

Figure 3.2: BPF Schematic Diagram

Characterizing NMOS and PMOS Devices

Since the carrier mobility is different for NMOS and PMOS (M_4, M_5), separate characterizations were done to ensure that.

- For NMOS: g_m/I_D vs. f_T was prioritized to ensure the gyrator loop (M1, M2, M3) could operate at RF speeds with minimal phase error.
- For PMOS (M4, M5): g_m/I_D vs. V_{gs} was focused on ensuring stable current sourcing and high output impedance.

The Three-Step Lookup Process

All g_m/I_D characterizations (g_m/I_D vs. f_T, g_m/I_D vs. $\frac{I_D}{W}$, and g_m/I_D vs. V_{gs}) were carried out for various channel lengths (L). Lookup curves were generated for each candidate L and evaluated RF performance, intrinsic gain and current density trade-offs.

1. g_m/I_D vs. f_T: For each L, the g_m/I_D operating point was identified that provided a transit frequency (f_T) significantly higher than 2.45 GHz to guarantee RF capability.

2. gm/ID vs. ID/W: Using the selected gm/ID point for each L, the current density was extracted to determine the required device width (W) for the target drain current.

3. g_m/I_D vs. $\frac{I_D}{W}$: The exact gate-source bias voltage was then obtained that required to sustain the operating point in saturation for each L.

By comparing speed, gain, parasitic capacitances, and layout area across different channel lengths, the final L was selected that provided the best trade-off between high f_T, manageable parasitic, and stable biasing for 2.45 GHz operation.

Detailed Component and Biasing Summary

Table 2: BPF Calculation Table

Device	Type	W/L (nm)	ID (µA)	gm (mS)	VGS (mV)	gm/ID (V^{-1})
M_{in}	NMOS	5000 / 100	51.97	0.754	550.0	14.51
M_1	NMOS	4000 / 150	152.75	1.807	620.3	11.83
M_2	NMOS	5000 / 150	145.51	1.694	632.1	11.64
M_3	NMOS	4000 / 150	251.22	1.604	735.5	6.38
M_{out}	NMOS	5000 / 100	86.11	1.109	627.6	12.87
$M_{B_{1,2}}$	NMOS	1250 / 150	43.05	0.349	680.0	8.11
M_4	PMOS	14000 / 390	303.20	1.810	-650.0	5.97
M_5	PMOS	14000 / 390	145.51	1.504	-550.0	10.33

Table 3: BPF Biasing Voltage

System Biasing	Value
Supply Voltage	1.2 V
VG1	640 mV
VIF	550 mV
VIS	680 mV
VIS/2	650 mV
VCM	900 mV
VI	1.2 V
VQ	1.2 V

Design Calculation

The active inductor and center frequency can be obtained through using the transconductance values calculated above by following the g_m/I_D methodology followed by the given parasitic capacitances (C_{gs}, C_{gd}) for the 45nm nodes,

Active Inductance Calculation (L_{eq})

$$L_{eq} = \frac{C_{node}}{G_{m(1,2)} \cdot G_{m3}} \quad [1]$$

Gyrator Transconductances: g_{m1} = 1.807 mS and g_{m3} = 1.604 mS.

Internal Node Capacitance (C_{node}) ≈ 11.2 ft.

Calculated L_{eq} ≈ 3.86 nH.

Center Frequency Resonance (f_c)

$$f_c = \frac{1}{2\pi\sqrt{L_{eq} * C_{total}}} \quad [2]$$

Total Tank Capacitance (C_{total}): approx. 1.09 pF.

Resonance Check ≈ 2.45 GHz.

Challenges and Solutions

At 45nm, transistors have awful short-channel effects, so they have low internal resistance - they behave rather like friction and destroy the filter sharpness. The M3 varactor was used to supply negative resistance, balancing parasitic loss. A Source Follower buffer (M_{out})

was also added whose gate acts as an open circuit to isolate the tank from external loads, preventing detuning. By balancing g_m/I_D for M_3 (6.38 V⁻¹) and M_{in} (14.51 V⁻¹), I achieved a sharp, stable filter with a compact footprint.

3.3.2 Low Noise Amplifier (LNA) Design

The Low Noise Amplifier (LNA) is a critical component in the receiver front-end of RF communication systems. It is responsible for amplifying weak signals, while preserving low noise levels and maintaining high linearity. In this design, the LNA operates at 2.45 GHz with 45 nm CMOS technology. The cascode topology with inductive source degeneration is chosen to optimize gain, noise figure (NF), and linearity

Design Considerations

This selective topology network is shown in Figure 3.3. To match the output to a 50Ω impedance, an output matching network is integrated with the LNA. The LNA's core output resistance is the parasitic parallel resistance core is the parasitic parallel resistance of the L_d C_d network, denoted as R_P . This resistance is transformed to 50Ω through the matching network, as depicted in Figure 3.3.

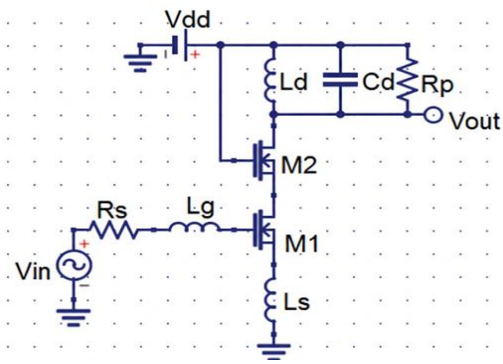

Figure 3.3: Cascode Stage with Inductive Source Degeneration

The design equations for the cascode stage with inductive source degeneration are as follows:

Input Impedance

The input impedance Z_{in} of the LNA is calculated as:

$$Z_{in} = R_g + R_{Ls} + R_{Lg} + s(L_s + L_g) + \frac{1}{sC_{gs}} + \frac{g_m}{C_{gs}} L_s \quad [3]$$

Where R_g and R_L are resistances, L_s and L_g are inductances, C_{gs} is the gate-source capacitance, g_m is the transconductance.

Schematic Diagram

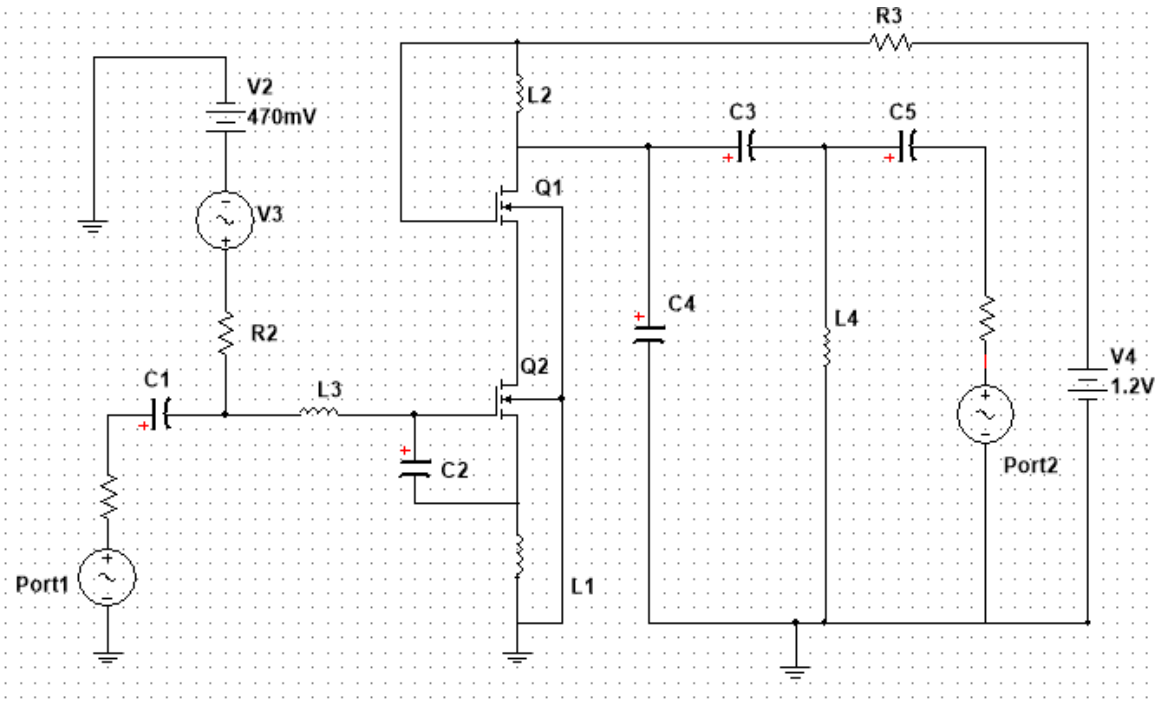

Figure 3.4: Single Stage with Inductive Source Degeneration

Real Part Matching

The real part of Z_{in} is matched to 50Ω and L_s and C_{gs1} are tuned to the operating frequency, constraining the values of $g_m, L_s, and\ C_{gs1}$.

$$R_e(Z_{in}) = \frac{g_m}{C_{gs}} L_s = L_s = R_s \quad [4]$$

$$I_m(Z_{in)} = s(L_s + L_g) - \frac{1}{sC_{gs}} = 0 \quad [5]$$

This demonstrates that the source inductance L_s is key to matching the input impedance of the LNA. For advanced technology nodes, an external capacitor required for desired C_{gs}.

The output stage of the LNA includes a L_d and C_d resonant network, which is tuned to the operating frequency. The LNA gain is primarily limited by the parasitic R_p resistance of this tank circuit.

Gain Calculation

The voltage gain is calculated as:

$$Gain = \frac{V_{out}}{V_{in}} = \frac{R_p}{2L_s w_0} \quad [6]$$

Noise Figure Calculation

The Noise Figure (NF) is calculated as:

$$NF = 1 + g_m R_s \gamma \left(\frac{w_o}{w_T}\right)^2 + \frac{4R_S}{R_p}\left(\frac{w_0}{w_T}\right)^2 \quad [7]$$

The Cascode Common-Source Low Noise Amplifier (LNA) utilizes a core structure consisting of a (M1) is the common-source transistor followed by a M2 is the common-gate transistor. A critical element in the input stage is the source inductance L_s, which is typically realized by the physical bond wire that connects the source terminal of M1 to the ground reference.

Bond wires, which are fine metallic wires (typically gold or aluminum), are used in integrated circuit (IC) packaging to create electrical connections between the semiconductor chip (die) and the external leads of the package, or in this case, a ground reference on the package or substrate. This physical structure inherently introduces an inductive component L_s, typically ranging from 1 nH to 2 nH [6].

Specification

Table 4: Low Noise Amplifier (LNA) Specification

Parameter	**Value**
Supply Voltage	1.2 V
Power Consumption	2 mW

Frequency	2.45 GHz
Noise Figure (NF, 50Ω)	< 2 dB
Gain	15–20 dB
S11 (Input Return Loss)	≤ -10 dB
S22 (Output Return Loss)	≤ -10 dB
S21 (Forward Gain)	15 dB - 20 dB
S12 (Reverse Isolation)	≤ -25 dB

Design Calculation

The LNA design uses a cascode topology with inductive source degeneration. This design approach of a cascode CS LNA which will be described in the following.

Some transistor parameters in 45 nm technology are:

$$t_{\mathrm{ox}} = 1.8 \text{ nm}$$

$$\mu_{\mathrm{n}} = 220 \text{ cm}^2/\mathrm{V} - \mathrm{s}$$

$\mathrm{V_{th}} = 0.32 \text{ V for L} = 180 \text{ nm (Minimum length: 45 nm, set to 4 times minimum)}$

Step (I): Transistor Current Calculation

The Current I_d is calculated using the formula

$$I_d = \frac{P_D}{V_{DD}} \qquad [8]$$

$$= \frac{2mW}{1.2\ V} = 1.667mA$$

Step (II): Oxide Capacitance Calculation

The Current I_d is calculated using the formula

Step (II): Oxide Capacitance Calculation

$$C_{ox} = \frac{\varepsilon_{0x}}{t_{ox}} \quad [9]$$

$$= \frac{3.9\,(8.854*10^{-12})}{1.8\text{ nm}} = 19.183 \times 10^{-3}\ \text{mF/m}^2$$

Step (III): Width Calculation for Optimal LNA Design

$$W_{opt} = \frac{1}{3w_o L\, C_{Ox} R_s} \quad [10]$$

$$= \frac{1}{3 \times (2\pi\ 2.45 \times 10^9 \times 180 \times 10{-}9 \times 19.183 \times 10{-}3 \times 50)} = 125\ \mu\text{m}$$

Step (IV): Transconductance Calculation

The transconductance g_m is calculated as:

$$g_m = \sqrt{2\mu_n c_{ox}\left(\frac{W_{opt}}{L}\right) I_D} \quad [11]$$

$$= \sqrt{2 * 22 * 10^{-3} * 19.183 * 10^{-3} * \frac{(125*10^{-6})}{(180*10^{-9})} * 1.667 * 10^{-3}}$$

$$= 31.25mA/V$$

Step (V): The Total gate to source capacitance C_{gst}

Thus C_{gst} can be found, $C_{gst} = \frac{g_m L_s}{R_s}$ [12]

$$= \frac{31.25 * 10^{-3} * 2 * 10^{-9}}{50} = 1.25pF$$

Step (VI): The gate to source overlap capacitance C_{gsMOS}

Thus C_{gsMOS} can be found, $C_{gsMOS} = \frac{2}{3}\, W_{opt} L\, C_{ox}$ [13]

$$= \frac{2}{3} * 125 * 10^{-6} * 180 * 10^{-9} * 19.183 * 10^{-3} = 287.75fF$$

Step (VII): The external gate to source capacitance $C_{gsexternal}$

Thus $C_{gsexternal}$ can be found, $C_{gsexternal} = C_{gst} - C_{gsMOS}$ = [14]
$1.25 * 10^{-12} - 287.75 * 10^{-15} = 962.255fF$

Step (VIII): The gate inductance L_g

Thus L_g can be found, $L_g = \frac{1}{w_0^2\, C_{gst}} - L_s = 1.37nH$ [15]

Step (IX): The parasitic resistance, R_p

Thus R_p can be found, $gain = g_m R_p$ [16]

$$R_p = \frac{10}{31.25 * 10^{-3}} = 320\ \Omega$$

Step (X): The quality factor, Q

Thus, Q can be obtained, $Q = \sqrt{\frac{R_p}{R_s}} - 1$ [17]

$$Q = \sqrt{\frac{320}{50}} - 1 = 2.32$$

Step (XI): The drain inductance, L_D

Thus L_D can be obtained, $L_D = \frac{R_p}{w_0\, Q}$ [18]

$$L_d = 9nH$$

Step (XII): The drain capacitance, C_D

Thus C_D can be obtained, $C_D = \frac{1}{w_0^2\, L_D}$ [19]

$$C_d = 471.81fF$$

Step (XIII): The gate to source voltage, V_{gs}

Thus V_{gs} can be obtained, $V_{gs} = V_{th} + \sqrt{2\frac{I_D}{\mu_n\, C_{ox}\frac{W}{L}}}$ [20]

$$= 500mV$$

Step (XIV): The matching inductance, L_m

Thus L_m can be obtained, $L_m = \frac{Q*50}{w_0}$ [21]

$$= \frac{2.32 * 50}{2\pi * 2.45 \times 10^9} = 7.535nH$$

Step (XV): The matching capacitance, C_m

Thus C_m can be obtained, $C_m = \frac{1}{w_{0^2} L_m} * (\frac{Q^2}{Q^2+1})$ [22]

$$= \frac{1}{(2\pi * 2.45 \times 10^9)^2 * 7.535 * 10^{-9}} * (\frac{2.32^2}{2.32^2 + 1}) = 472.29fH$$

3.3.3 Mixer

Mixers are essential non-linear components in receivers and transmitters that perform frequency translation. They achieve this by multiplying the RF input signal with a LO signal, converting the signal to a new Intermediate Frequency (IF). The primary goal is to shift the input signal's frequency, but real-world mixers can introduce issues such as distortion, noise, and signal leakage, which affect the overall system performance [14][15].

Purpose of the Mixer

A mixer translates the frequency of an input signal, such as converting a high-frequency RF signal (e.g., 2.45 GHz) down to a lower IF signal (e.g., 50 MHz) for easier filtering or processing. This is accomplished by multiplying the RF signal with the Local Oscillator (LO) signal. It does this by multiplying the RF signal with a Local Oscillator (LO) signal:

$$v_{IF}(t) = v_{RF}(t) \times v_{LO}(t) \quad [23]$$

Because of trigonometric properties:

$$\cos(\omega_{RF} t)\cos(\omega_{LO} t) = \frac{1}{2}[\cos(\omega_{RF} - \omega_{LO})t + \cos(\omega_{RF} + \omega_{LO})t] \quad [24]$$

The output contains sum and difference frequencies:

$$IF = |\omega_{RF} - \omega_{LO}| \quad [25]$$

Choosing Topology

We chose the Gilbert Cell mixer because it offers several important benefits:

- High linearity and good isolation
- Low LO power requirement
- Differential outputs
- Compatible with CMOS process
- Stable conversion gain

Gilbert Cell can be a very good choice for high-performance and low-power applications. Its architecture sup- ports high frequency conversion while maintaining low distortion and noise.

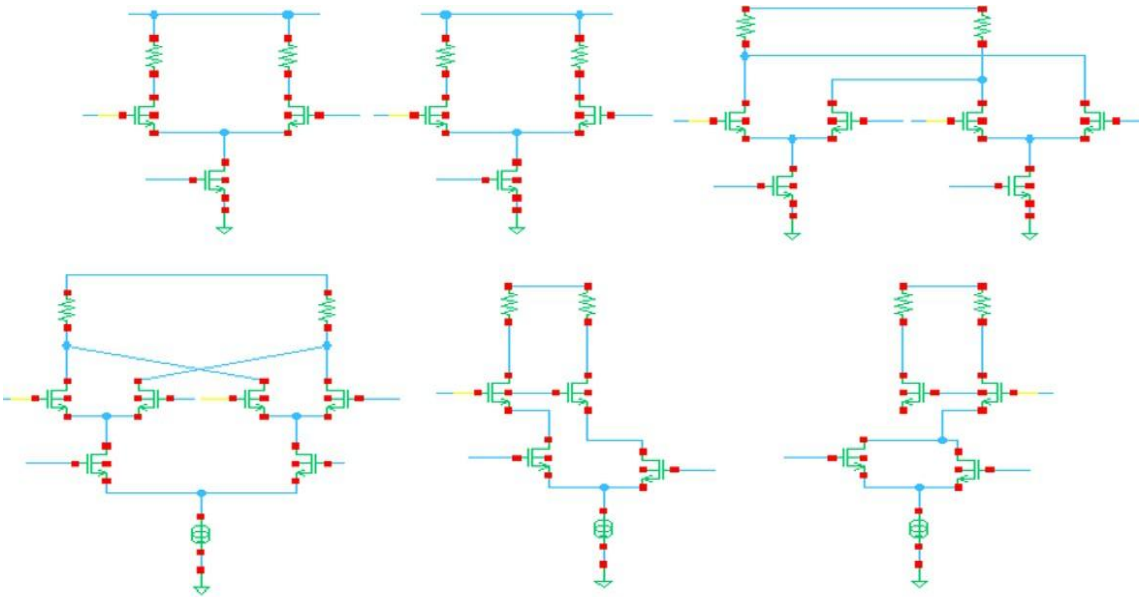

Figure 3.5: Developing the Gilbert Cell Circuit [16]

Mixer Schematic Diagram

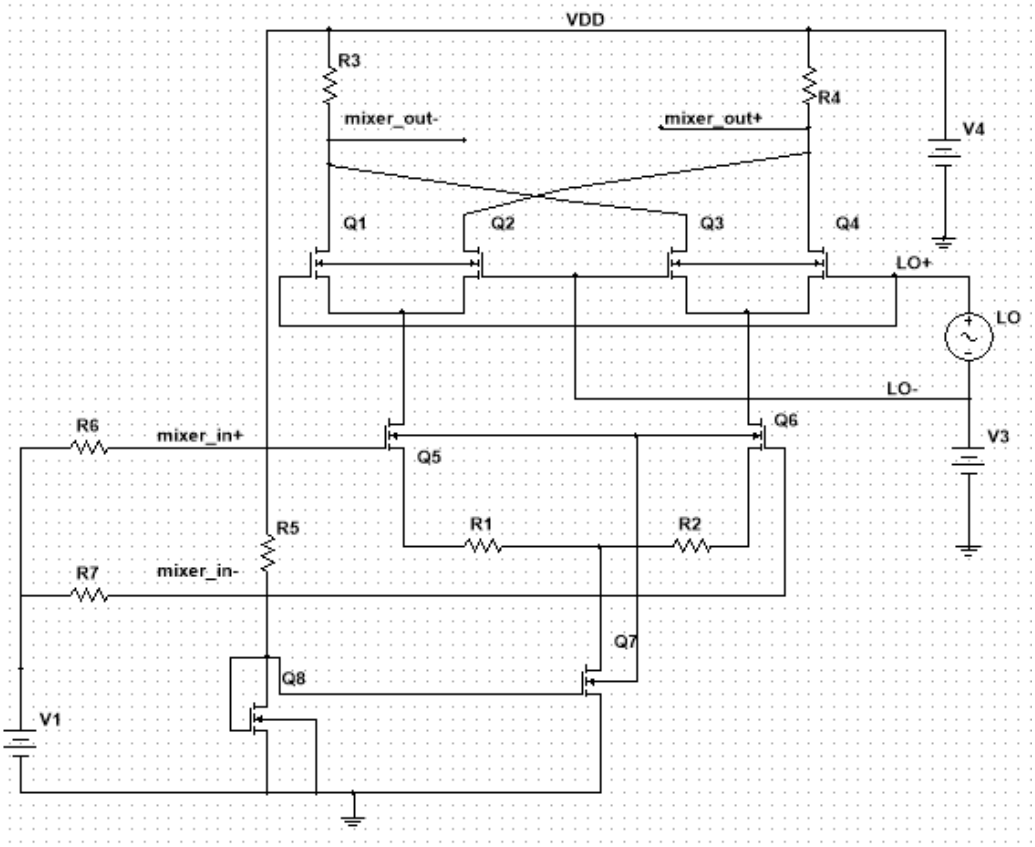

Figure 3.6: Mixer Schematic Diagram

Mixer Design Calculations

Table 5: Mixer Design Specifications

Specification	Value
Supply Voltage	1.2 V
Power Consumption	1.5 mW
Load Resistance	1 kΩ
Conversion Gain	20 dB
Threshold Voltage	355 mV
Beff	362 A/V²

The mixer calculations are given below [1][17]:

Design Calculation

Step (I): The bias current, I_{bias}

Thus I_{bias} can be obtained, $$I_{bias} = \frac{P}{2} \quad [26]$$

$$= 1.25mA$$

Step (II): The Current per branch

$$I_d = \frac{I_{bias}}{2} \quad [27]$$

$$= 0.625m\text{A}$$

Step (III): The transconductance, g_m

$$g_m = \frac{A_v\,\pi}{2\,R_{Load}} \quad [28]$$

$$= 15.708\,mS$$

Step (IV): The RF Overdrive Voltage, V_{ov}

$$V_{ov} = \frac{2I_D}{g_m} \quad [29]$$

$$= 80mV$$

Step (V): The RF stage sizing

$$\frac{W}{L} = \frac{2I_d}{B_{eff} * V_{ov}^2} \quad [30]$$

$$= 528.6$$

Step (VI): The LO Source Voltage, V_{L0}

$$V_{LO} = V_{cmrf} - V_{th} \quad [31]$$

$$= 0.405\,V$$

Step (VII): The LO Overdrive Voltage, V_{ov}

Thus V_{OV} can be obtained,

$$V_{ov} = V_{cmlo} - V_{LO} - V_{th} = 0.1\,V \quad [32]$$

Step (VIII): The LO stage sizing

Thus $\frac{W}{L}$ can be obtained, $$\frac{W}{L} = \frac{2I_d}{B_{eff} * V_{ov}^2} \quad [33]$$

$$= 345.3$$

Step (IX): The Tail sizing

Thus $\frac{W}{L}$ can be obtained, $\frac{W}{L} = \frac{2I_d}{B_{eff} * V_{ov}^2}$ [34]

$$= 83.6$$

3.3.4 Low Pass Filter (LPF)

The Low Pass Filter (LPF) will be used for removing all the high-frequency components from the baseband down-converted signal. The LPF will pass only the desired baseband signal while sup pressing any residual high-frequency noise or harmonic content.

Design Considerations

There are several passive LC filter topologies, including lattice, m-derived, and ladder types. Ladder type network is the most stable and most realizable structure for high selectivity and good impedance definition. Thus, we have designed a passive ladder type Low Pass Filter according to our requirements in this project.

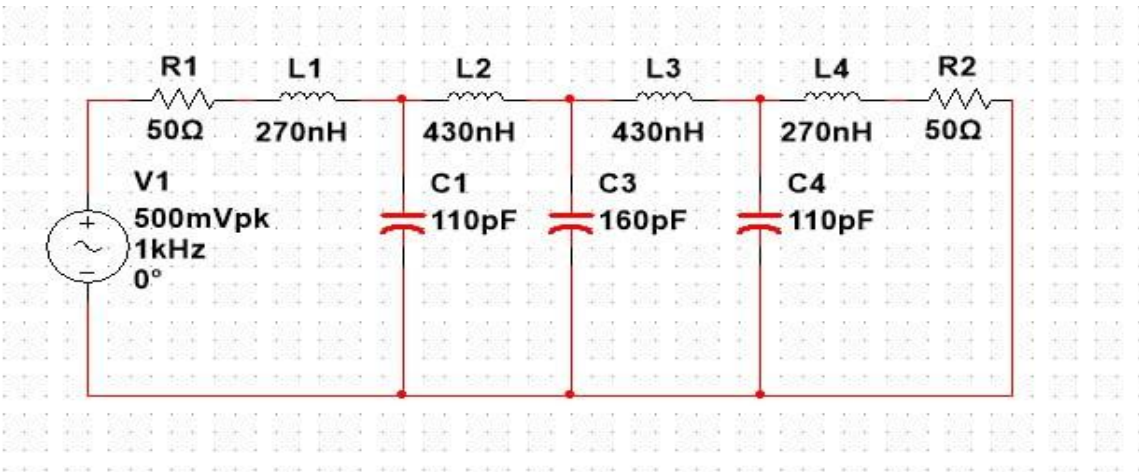

Figure 3.7: 7th Order Passive Low Pass Filter Prototype

Normalized Prototype and Parameter Scaling

To begin the passive low-pass filter design, the standard low-pass prototype was used. Prototype filters are defined in a normalized domain where the cutoff angular frequency is $\omega_c = 1$ rad/s and the reference impedance is $R_0 = 1\ \Omega$. Working in this normalized domain simplifies the design because the element values depend only on the filter order and ripple specifications, and are independent of the actual operating frequency. Using the coefficient tables corresponding to our requirements, the element coefficients $g_1, g_2, \ldots, g_n$ were obtained [18].

Element values for doubly terminated Butterworth and Chebyshev low-pass filters

Butterworth low-pass element values (1-rad/s bandwidth)										
n	L_1	C_2	L_3	C_4	L_5	C_6	L_7	C_8	L_9	C_{10}
2	1.414	1.414								
3	1.000	2.000	1.000							
4	0.7654	1.848	1.848	0.7654						
5	0.6180	1.618	2.000	1.618	0.6180					
6	0.5176	1.414	1.932	1.932	1.414	0.5176				
7	0.4450	1.247	1.802	2.000	1.802	1.247	0.4450			
8	0.3902	1.111	1.663	1.962	1.962	1.663	1.111	0.3902		
9	0.3473	1.000	1.532	1.879	2.000	1.879	1.532	1.000	0.3473	
10	0.3129	0.9080	1.414	1.782	1.975	1.975	1.782	1.414	0.9080	0.3129

Chebyshev low-pass element values (1-rad/s bandwidth)									
n	L_1	C_2	L_3	C_4	L_5	C_6	L_7	C_8	R_2
0.1-dB ripple									
2	0.84304	0.62201							0.73781
3	1.03156	1.14740	1.03156						1.00000
4	1.10879	1.30618	1.77035	0.81807					0.73781
5	1.14681	1.37121	1.97500	1.37121	1.14681				1.00000
6	1.16811	1.40397	2.05621	1.51709	1.90280	0.86184			0.73781
7	1.18118	1.42281	2.09667	1.57340	2.09667	1.42281	1.18118		1.00000
8	1.18975	1.43465	2.11990	1.60101	2.16995	1.58408	1.94447	0.87781	0.73781
0.5-dB ripple									
3	1.5963	1.0967	1.5963						1.0000
5	1.7058	1.2296	2.5408	1.2296	1.7058				1.0000
7	1.7373	1.2582	2.6383	1.3443	2.6383	1.2582	1.7373		1.0000
1.0-dB ripple									
3	2.0236	0.9941	2.0236						1.0000
5	2.1349	1.0911	3.0009	1.0911	2.1349				1.0000
7	2.1666	1.1115	3.0936	1.1735	3.0936	1.1115	2.1666		1.0000

Figure 3.8:Coefficients of the Chebyshev lowpass prototype filter normalized to 1 rad/s corner frequency and 1 Ω impedance [18]

After selecting the coefficients from the normalized table, the prototype elements were converted into practical inductors and capacitors through frequency and impedance scaling. The denormalization is performed using the following equations:

$$L_k = \frac{R_s * g_k}{w_c} \quad [35]$$

$$C_k = \frac{g_k}{R_s * w_c} \quad [36]$$

where $R_0 = 50\ \Omega$ is the source/load impedance and $\omega_c = 2\pi \times f_c$ is the target cutoff angular frequency. Using these relations, each ladder element was computed to obtain the required

inductor and capacitor values for the n-th-order LC ladder network. These scaled values form the final passive low-pass filter suitable for simulation and implementation

Filter Order Determination and Prototype Selection

Before using the normalized low-pass prototype tables, three parameters must be de- fined: the filter type, the required filter order N, and the system specifications. The tables list

the normalized element coefficients $g_0, g_1, \ldots, g_{n+1}$ for a prototype with 1 impedance and 1 rad/s cutoff, but these values can only be selected after the filter order and response type are known.

The required order N is determined from the design specifications like passband frequency f_p, stopband frequency f_s, passband ripple A_p, and stopband attenuation A_s. Different prototype responses (Butterworth, Chebyshev-I, Chebyshev-II, etc.) provide different selectivity, and therefore require different orders to meet the same requirements.

Once N is calculated using the appropriate formula, the corresponding row of normalized coefficients g_k is taken from the table and later denormalized to obtain the actual L and C values.

Filter Type	Order Calculation Formula
Chebyshev Type I	$N = \dfrac{\cosh^{-1}\left(\sqrt{\dfrac{10^{\frac{A_s}{10}}-1}{10^{\frac{A_p}{10}}-1}}\right)}{\cosh^{-1}\left(\frac{f_s}{f_p}\right)} = 7$
Butterworth	$N = \dfrac{\log\left(\dfrac{10^{\frac{A_s}{10}}-1}{10^{\frac{A_p}{10}}-1}\right)}{2\log\left(\frac{f_s}{f_p}\right)} = 14$

Figure 3.9: Filter Order Calculation Formulas

Specification

Table 6: Low Pass Filter (LPF) Specification

Parameter	Specification
Passband Frequency	20 MHz
Stopband Frequency	30 MHz
Stopband Attenuation	> 40 dB
Bandwidth	20 MHz
Passband Ripple	1 dB
Source Impedance	50 Ω
Load Impedance	50 Ω

Design Calculation

Step (1): The Source Impedance

$$R_s = 50\ \Omega$$

Step (1I): The Series Inductor L_1, when $g_1 = 2.1666$

$$L_1 = \frac{R_s * g_1}{w_c} \qquad [37]$$

$$L_1 = 862.08\ nH$$

Step (I1I): The Shunt Capacitor C_2, when $g_2 = 1.1115$

$$C_2 = \frac{g_2}{R_s\, w_c} \qquad [38]$$

$$C_2 = 176.9\ pF$$

Step (IV): The Series Inductor L_3, when $g_3 = 3.0936$

$$L_3 = \frac{R_s * g_3}{w_c} \quad [39]$$

$$L_3 = 1230.96\, nH$$

Step (V): The Shunt Capacitor C_4, when $g_4 = 1.1735$

$$C_4 = \frac{g_4}{R_s\, w_c} \quad [40]$$

$$C_4 = 186.77pF$$

Step (VI): The Series Inductor L_5, when $g_5 = 3.0936$

$$L_5 = \frac{R_s * g_5}{w_c} \quad [41]$$

$$L_5 = 1230.96\, nH$$

Step (VII): The Shunt Capacitor C_6, when $g_6 = 1.1115$

$$C_6 = \frac{g_6}{R_s\, w_c} \quad [42]$$

$$C_6 = 176.9\, pF$$

Step (VIII): The Series Inductor L_7, when $g_7 = 2.1666$

$$L_7 = \frac{R_s * g_7}{w_c} \quad [43]$$

$$L_7 = 862.08\, nH$$

Step (1X): The Load Impedance

$$R_1, g_{8,} R_1 \; = \; 50\, \Omega$$

Transition to Active Filter

Although the passive LC ladder design meets the theoretical performance requirements, practical limitations make it less suitable for integrated implementation. Realizing high-value inductors and capacitors on-chip is challenging due to large area, low quality factors, and process variability, leading to degraded filter response. Also, passive filters do not

possess any tuning means or gain controllability, restricting the ability to compensate for fabrication tolerances and temperature changes.

In order to get around these limitations and obtain a more compact, tunable, and integration friendly solution we moved to an active filter design. Active filter topologies Change inductors with transconductors and capacitors, allowing electronic adjustment of the cutoff frequency, enhanced linearity and more applicable for CMOS technology This inspired from passive ladder prototype to active filter architecture for subsequent development [13][19].

Gm-C Active Low Pass Filter

Various active filter topologies such as Active-RC, MOSFET-C, and Switched-Capacitor circuits find applications in analog design, the Gm-C (Transconductance-Capacitor) topology shows superior performance for high-frequency application, so it has been chosen in this work to realize a gigahertz (GHz) application. Gm-C filters also work in an open-loop configuration unlike Op-Amp based Active-RC filters that are limited by the gain-bandwidth product of the amplifier and can achieve 2.45GHz target required for this project. Moreover, this topology can be electronically tuned because the center frequency (f_c) would be easily adjusted by altering the bias current of transconductance (Gm) cells. Its flexibility makes it the most efficient integration solution at 45nm CMOS process.

Design Considerations

While there are a variety of Transconductance (Gm) cell complexes, the choice to use a 5-transistor Operational Transconductance Amplifier (OTA) for this design was justified as the best tradeoff between architectural simplicity versus high frequency performance. Using a single-stage differential pair with active load, this topology minimizes the number of internal nodes and parasitic capacitances present, which is crucial in maintaining stability and reaching the desired frequency. Additionally, the 5-transistor OTA has a repetition Input Common-Mode range (ICMR) and favorable electronic tunability, as transconductance can be set directly via changing the bias current [20].

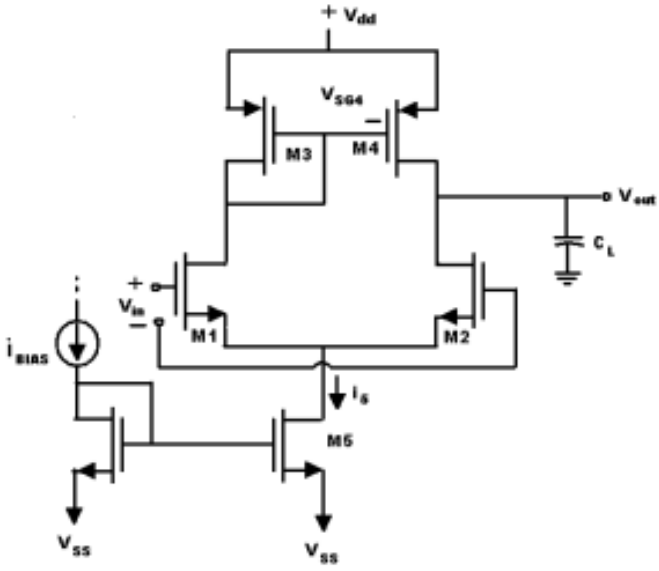

Figure 3.10: 5 Transistor OTA

1st Order Low Pass Filter

The cutoff frequency (f_c) is traditionally determined by the fixed pole at the output node, usually defined by the RC constant; however, we have replaced the passive resistor with an active Gm cell to gain dynamic control over the circuit's frequency response. Because we implement the resistance as, we can set its value, and thus the fc by simply setting a bias current to define transconductance. By optimally arranging RC values, we can not only accurately locate the pole at our desired cutoff frequency (f_c) using this Gm-C method, but also independently adjust the values of input and load cells to set overall voltage gain freely. This amount of active tuning is important as active components can adjust key element values to overcome processes variations at the 45nm CMOS node, which would have been insufficiently precise for fixed passive components [21][16].

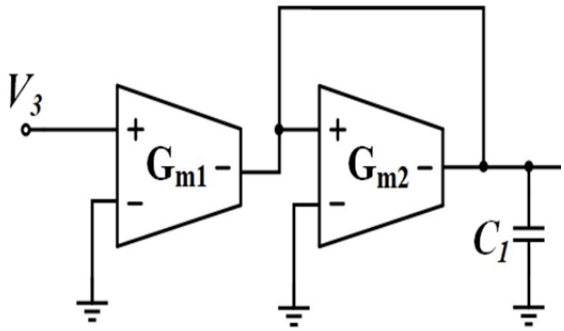

Figure 3.11: Block Diagram of 1st Order LPF

1st Order Active Low Pass Filter Schematic Design

The schematic design of the 1st order low pass filter is shown below to depict the configuration before performing any analysis.

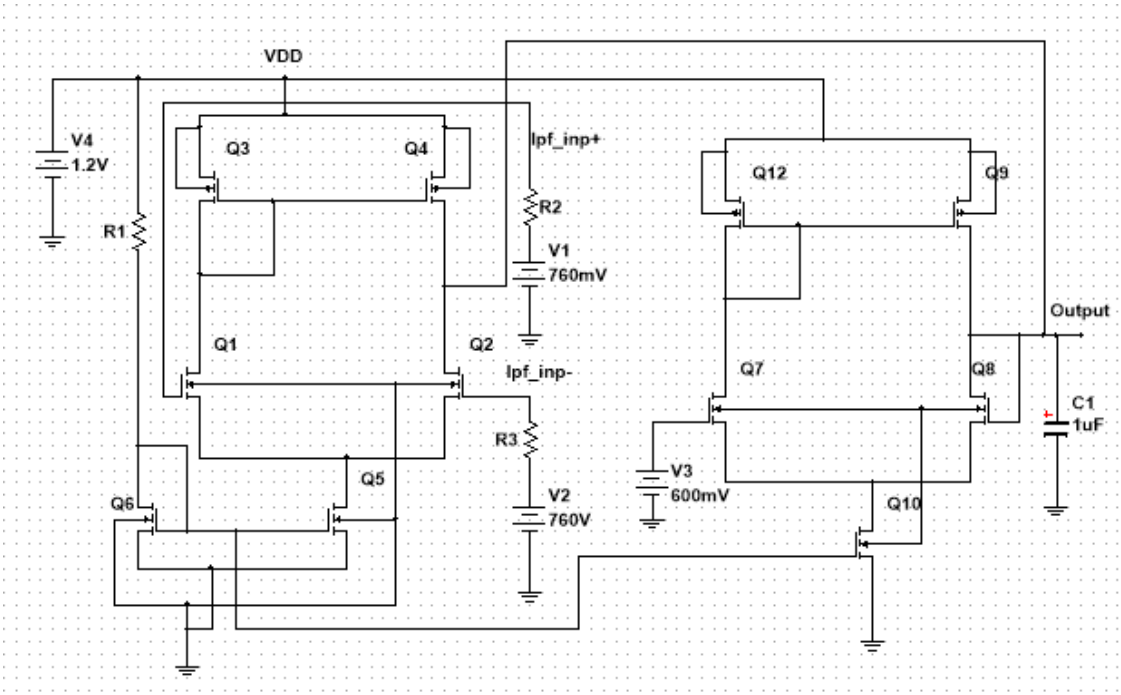

Figure 3.12: 1st Order Low Pass Filter Schematic Diagram

Design Calculation of Active Filter

Table 7: Specification for Active Low Pass Filter

Specification	Value
Supply Voltage	1.2 V
Gain	1
Output Capacitance	5pF
Gain Bandwidth	200 MHz
Threshold Voltage	355 mV
B_{eff}	362 A/V²
Slew Rate	10 $V/\mu s$

Required Equations are,

Parasitic Capacitance at Output Node

$$C_{parasitic} = C_{gd_4} + C_{db_4} + C_{sb_4} + C_{gd_2} + C_{db_2} + C_{sb_2} + C_{gs_2} \quad [44]$$

$$+ C_{gd_{10}} + C_{db_{10}} + C_{sb_{10}} + C_{gd_8} + C_{db_8} + C_{sb_8} + C_{gs_8}$$

Unity-Gain Frequency: $f_c = \frac{g_{m_8}}{2\pi C_L}$ [45]

Transconductance Derivation: $g_{m_8} = 2\pi f_c C_L$ [46]

Voltage Gain: $A_v = G_M R_{out}$ [47]

Slew Rate Current: $I_{SR} = \text{Slew Rate} \times C_L$ [48]

Total Supply Current: $I_{Total} = I_{Bias} + I_{SS_1} + I_{SS_2}$ [49]

Saturation Condition: $V_{D_1} = V_{CM_+} - V_{th}$ [50]

Source-Drain Voltage: $V_{SD_3} = V_{S_3} - V_{D_3}$ [51]

Lower ICMR Limit: $V_{in,CM_-} = V_{GS_1} + V_{OV_5}$ [52]

Gate-Source Voltage: $V_{GS_1} = V_{th} + \sqrt{\frac{2I_{D_1}}{\mu_n C_{ox}\left(\frac{W}{L}\right)_1}}$ [53]

Trans-conductance: $g_{m_1} = \sqrt{2I_{D_1}(\mu_n C_{ox})\left(\frac{W}{L}\right)_1}$ [54]

PMOS Sizing : $\left(\frac{W}{L}\right)_3 = \frac{2\times I_{D_{2,3}}}{\mu_p C_{ox}(V_{SG_3} - |V_{tp}|)^2}$ [55]

Tail Current : $\left(\frac{W}{L}\right)_5 = \frac{2I_{D_5}}{\mu_n C_{ox}(V_{OV_5})^2}$ [56]

Load Device: $\left(\frac{W}{L}\right)_8 = \frac{(g_{m_8})^2}{2\times I_{D_8}\times \mu_n C_{ox}}$ [57]

Mirror Device: $\left(\frac{W}{L}\right)_9 = \frac{2 \times I_{D9,8}}{\mu_p C_{ox} \left(V_{SG_{8,9}} - |V_{tp}|\right)^2}$ [58]

2nd Order Active Low Pass Filter

By cascading two first-order stages, we have transformed our original design of a simple first-order filter into a second-order bandpass one which greatly enhances the pass-band response of the filter and also yields steeper roll-off. A single-stage only has limited attenuation, but if we cascade two of these stages together, we effectively double the roll-off slope to better filter out unwanted signals around our target center frequency at 2.45 GHz. This unique cascaded setup enables active tunability for the two stages independently without compromising on filter performance. Accurate tuning of the g_m values for each stage gives us pole location and Q control, leading to a more robust effective design relative to a simple first-order implementation [21].

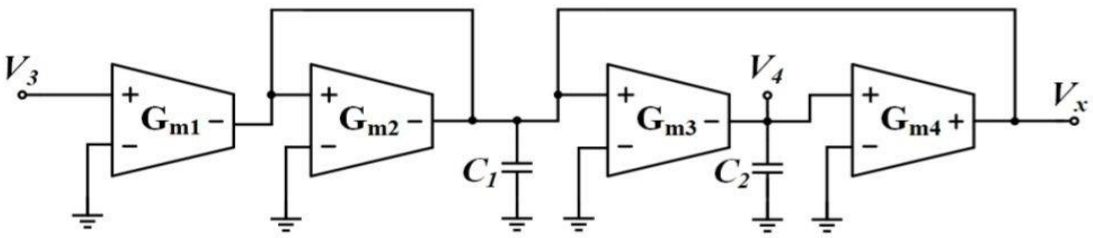

Figure 3.13: Gm-C 2nd Order Low Pass Filter Block Diagram

2nd Order Active Low Pass Filter Schematic Design

Before going for the analysis, here is the schematic design of 2nd Order Low Pass Filter to show how it is configured.

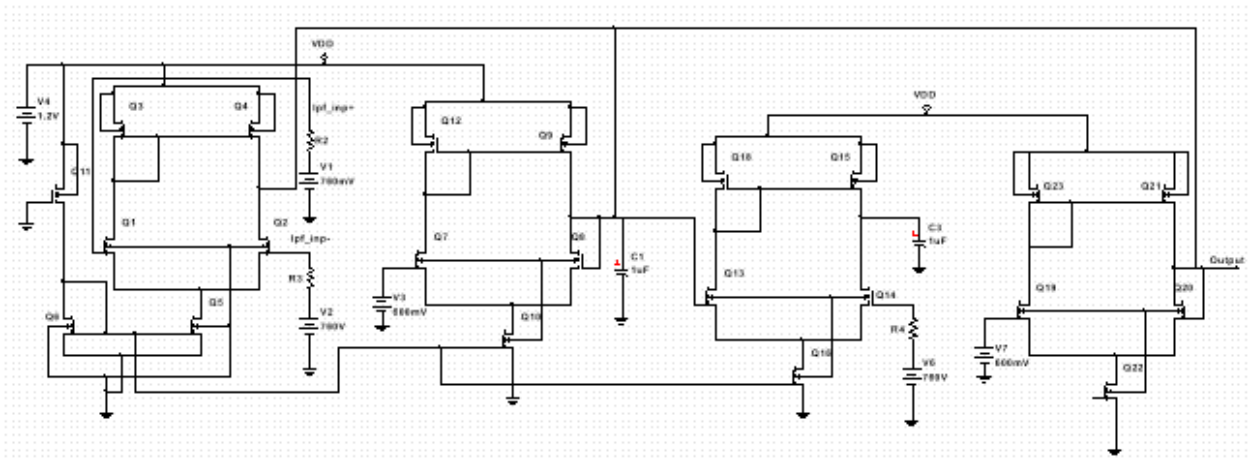

Figure 3.14: 2nd Order Low Pass Filter Schematic Diagram

3.4 Integrated RF Receiver Block

3.4.1 System Architecture and Integration

The RF receiver chain adopts heterodyne architecture, which is implemented using 45nm CMOS technology. The main goal of this integration is to receive and down-convert an incoming 2.45 GHz RF signal. The design of the final LPF stage, with a cut-off frequency of 20 MHz, allows for multi-site detection rather than locking down the receiver to one IF. This baseband wideband nature achieves a highly flexible message recovery; any modulated version of the message signal (DSB-SC, 16-QAM) whose maximum frequency hits within this context of 20 MHz can hence be successfully recovered without attenuation. This dynamic signal recovery is, in addition, assured to maintain a high linearity, low noise figure and excellent common-mode rejection through the chain thanks to the entire differential integration.

3.4.2 Inter-Stage and I/O Impedance Matching Methodology

In Maximum power transfer and minimum signal reflection across cascaded blocks is crucial in high-frequency RF integrated circuit (RFIC) design. A systematic impedance matching approach was followed to connect the RF frontend blocks (Antenna, BPF, LNA and Mixer) used in this 2.45 GHz receiver. Capacity-type active matching networks were implemented in this case, avoiding the thermal noise and signal degradation of resistive matching.

The impedance matching was performed with steps as follows:

Impedance Extraction via Z-Parameters

Prior to designing the matching networks, Z_{in} and Z_{out} were extracted for each individual block using Cadence Virtuoso.

- S-Parameter to Z Parameter conversion: An SP (S- Parameter) analysis for each isolated block had been done at the operating frequency of 2.45 GHz. Cadence Calculator was utilized to convert the resulting scattering parameters into Z-parameters.

- Identification of Complex Impedance: The Z-parameters provided the complex impedance for each node in the form of Z = R ± jX, where R is the real resistive element and X is reactive (capacitive or inductive). Finding this specific complex value was the required first step towards conjugate matching.

Reactive Compensation and Resistance Transformation

After determining the complex impedances, LC matching networks (L-sections and Pi-networks) where used to cancel out the undesirable reactance and transform the resistance up or down to a target value (e.g., standard 50 Ω at RF input).

- Canceling Reactance (Tuning): When a block had parasitic capacitance = −j XC at its input, an inductor (+j XL) was inserted either to resonate the capacitance out in series or shunt configuration at 2.45 GHz the resonance condition was satisfied when:

  XL + XC = 0 where, ΩωL=1/(ωC)

- Transforming Resistance (Matching): To Reactive components in parallel and series were used to move the real part of the impedance. We can add a shunt reactance to reduce the equivalent parallel resistance, or a series reactance for stepping up.

- LC Tank Implementation: For Inter-stage matching (for instance, between LNA and Mixer), we can not only match the corresponding impedance of these two devices with LC tanks, but also be able to act as band-pass filter – this suppresses potential out-of-band noise.

Design Calculation for the LC Network

The inductors (L) and capacitors (C) that were used in the matching networks were calculated mathematically utilizing Quality Factor (Q) equations for series to parallel conversion circuits.

Assuming source resistance (RS) and load resistance (RL), where RL > RS, the loaded Q of the matching network is defined as:

$$Q = \sqrt{(\frac{R_L}{R_s} - 1)} \qquad [59]$$

This Q factor is then used to compute the series reactance (Xs) and parallel reactance (Xp) required:

$$Xs = Q * RS \quad [60]$$

$$Xp = \frac{R_L}{Q} \quad [61]$$

So finally, these reactance values were translated into their respective physical components (inductance and capacitance) at 2.45 GHz carrier frequency (fc):

$$L = \frac{X_L}{2\pi fc} \quad [62]$$

$$C = \frac{1}{2\pi * f_c * X_c} \quad [63]$$

Using the above equations; and iterating these values in Cadence schematic, match was done perfectly across each of the stages ensuring that reflection coefficient (γ) is under control where-matching ensures maximum voltage conversion gain of receiver chain.

Chapter 4

4. Results

In this section four major blocks of the proposed RF receiver design are discussed: Band Pass Filter (BPF), Low Noise Amplifier (LNA), Mixer, and Low Pass Filter (LPF). The simulation design results are compared with the design specifications to evaluate the performance of each block.

4.1 Band Pass Filter (BPF)

4.1.1 Schematic Design

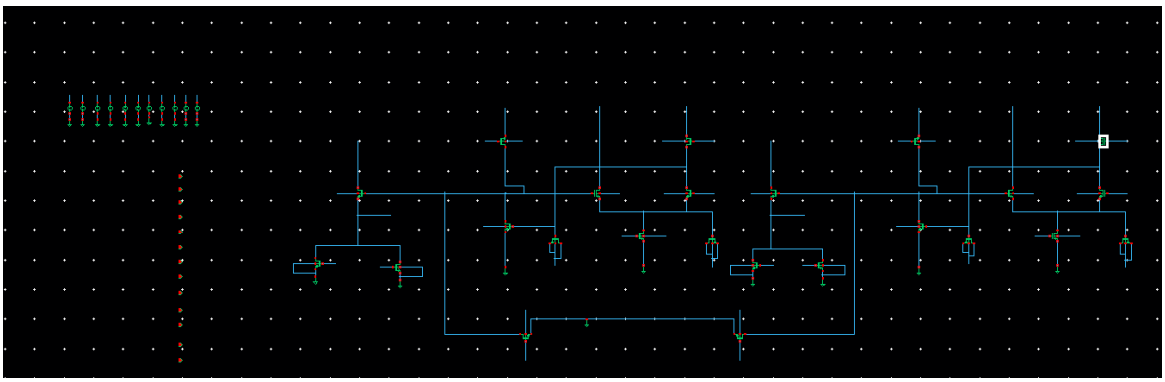

Figure 4.1: Schematic Design of the BPF

4.1.2 DC Analysis

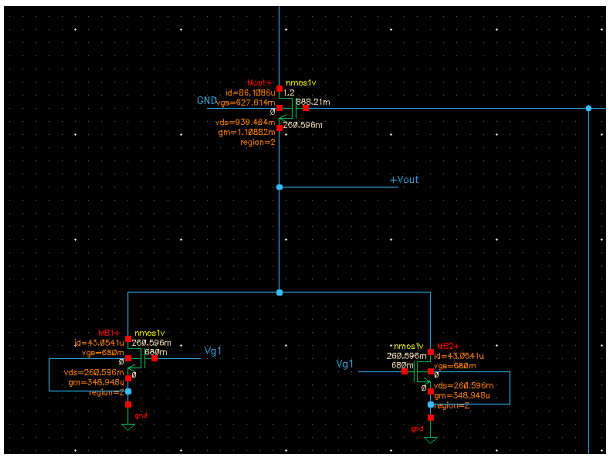

[a]

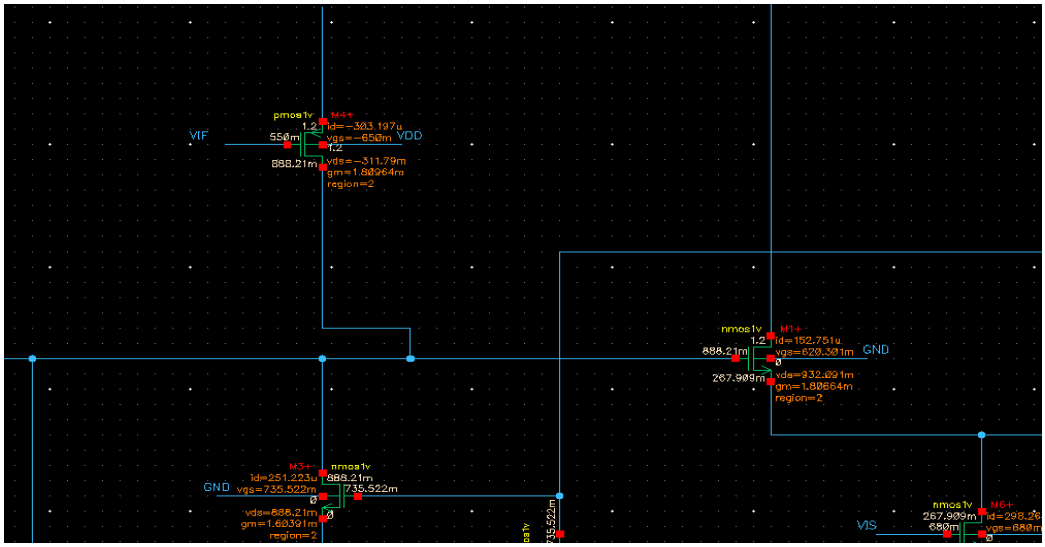
VIF
VDD
GND
VIS

[b]

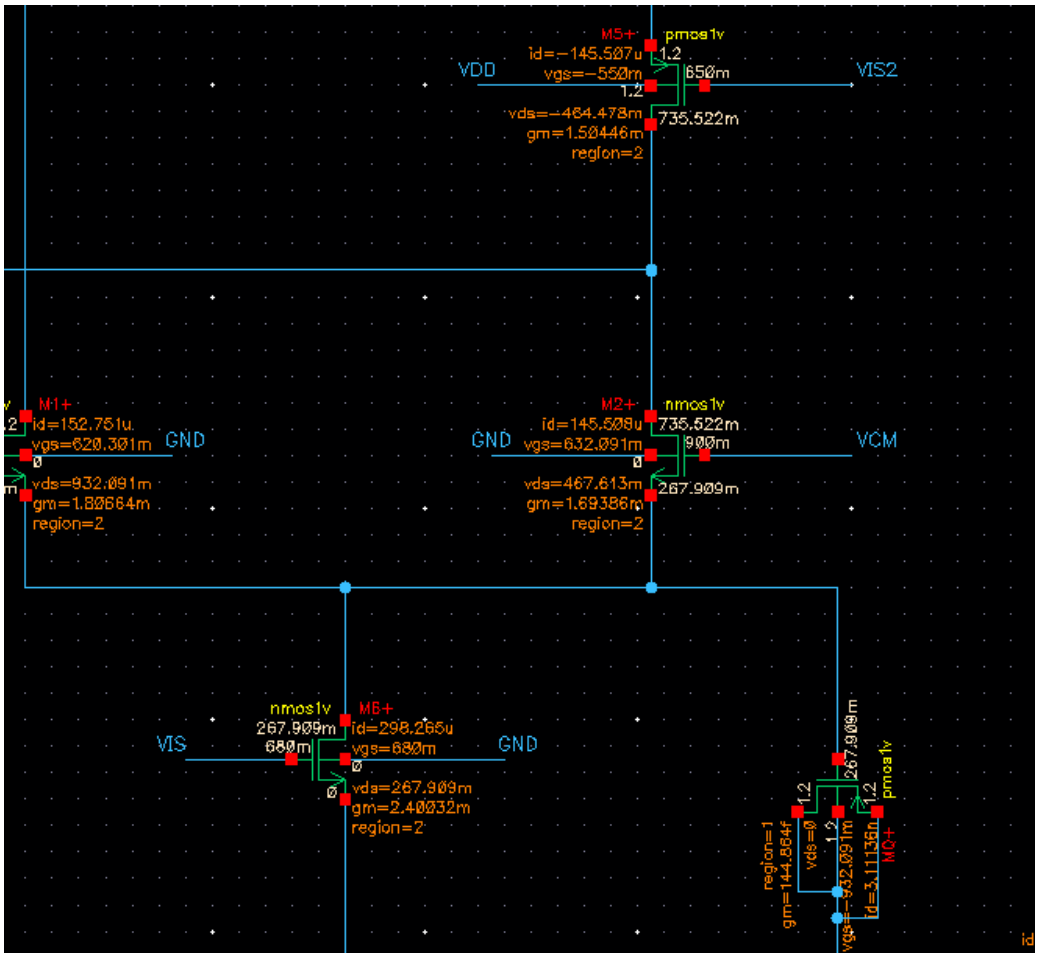
M5+
pmos1v
id=-145.507u
vgs=-550m
VDD
650m
VIS2
vds=-464.478m
gm=1.50446m
region=2
735.522m
M1+
id=152.751u
vgs=620.301m
GND
vds=932.091m
gm=1.80664m
region=2
M2+
nmos1v
id=145.508u
735.522m
GND
vgs=632.091m
900m
VCM
vds=467.613m
gm=1.69386m
region=2
267.909m
nmos1v
M6+
267.909m
id=298.265u
VIS
680m
vgs=680m
GND
vds=267.909m
gm=2.40032m
region=2
pmos1v
M0+

[c]

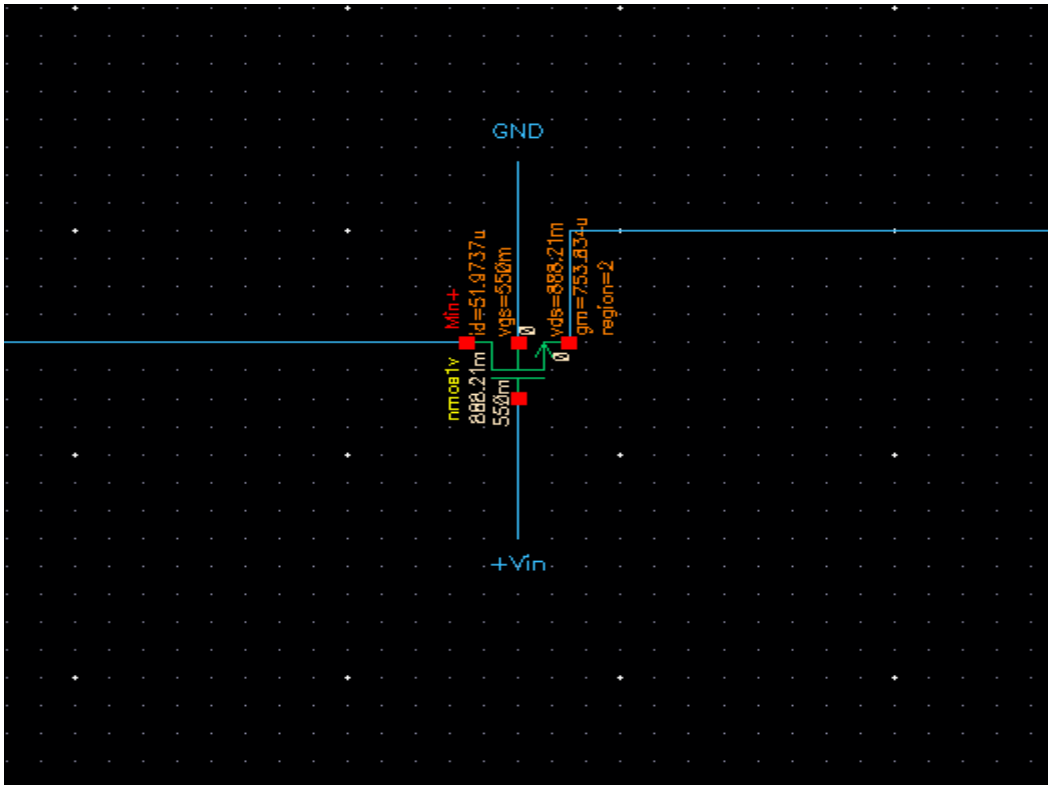

[d]

Figure 4.2: [a][b][c][d] DC Analysis of BPF

4.1.3 AC Analysis

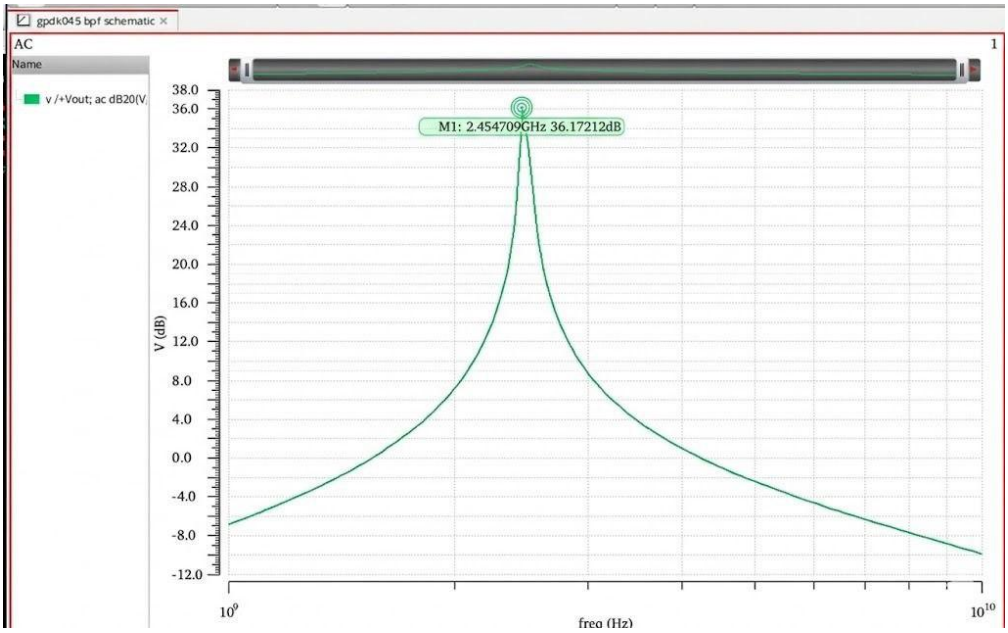

Figure 4.3: Center Frequency at 2.45GHz

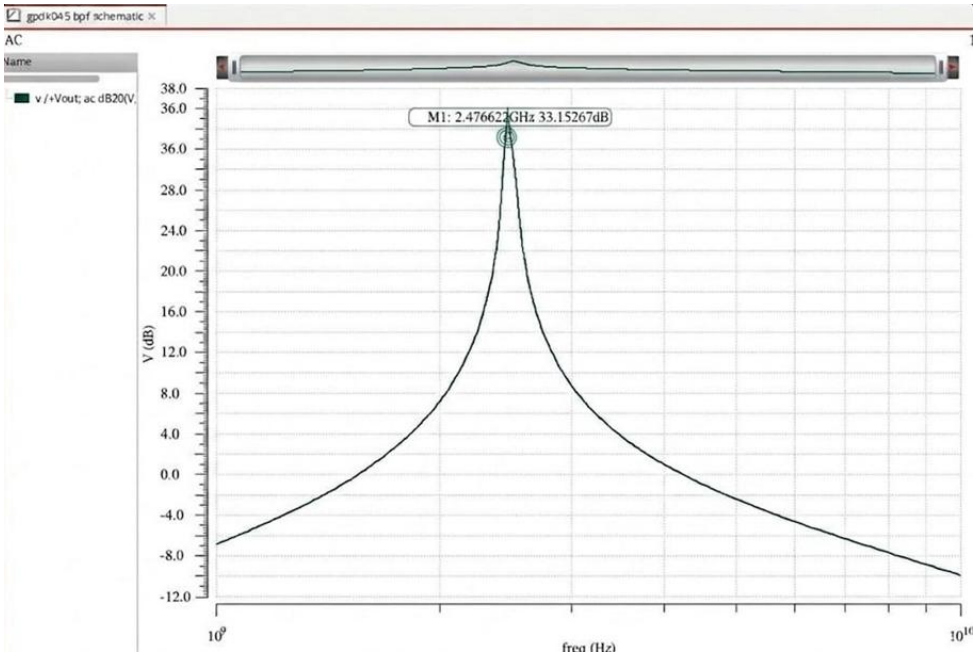

Figure 4.4: 3dB Point

4.2 Low Noise Amplifier (LNA)

The Low Noise Amplifier (LNA) was designed for low noise and high gain. The simulation results showed:

4.5.1 Schematic Design

The schematic design of the Low Noise Amplifier (LNA) is shown below to depict the con- figuration before performing any analysis.

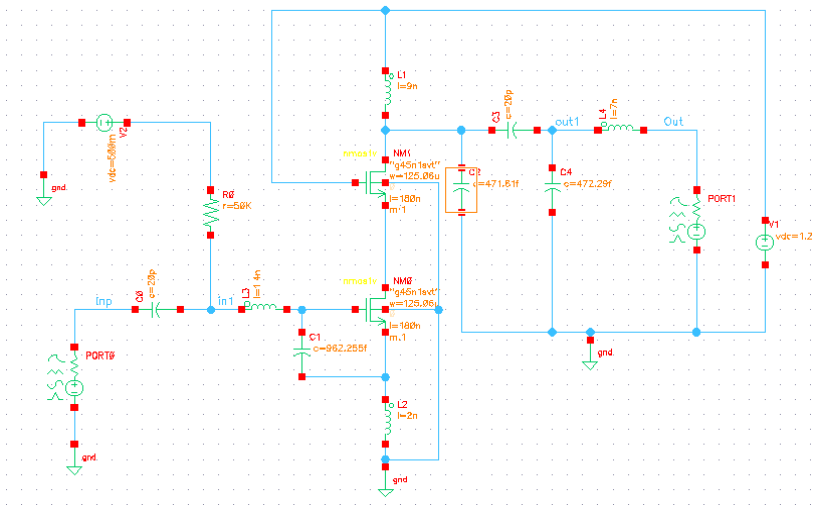

Figure 4.5: Schematic Design of the LNA

4.3.1 DC Analysis

The DC analysis checks the biasing conditions to ensure proper transistor operation and showing the MOSFET M1 & M2 in the saturation region (2).

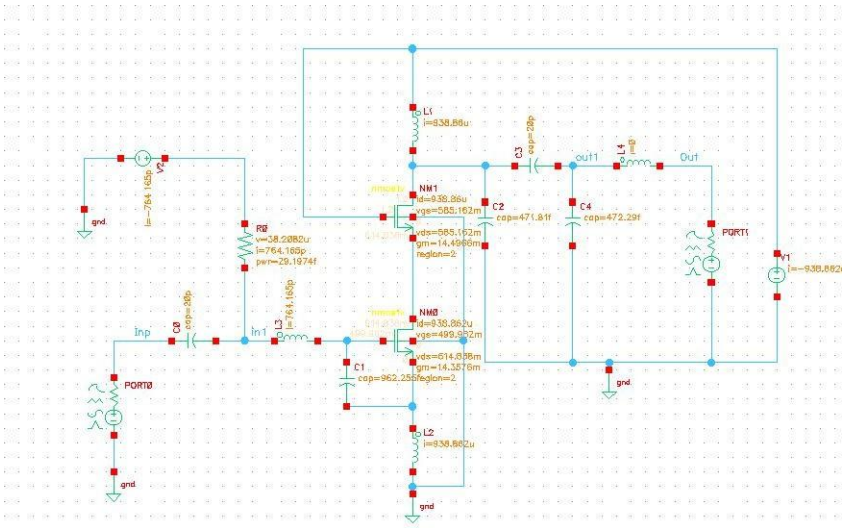

Figure 4.6: DC Analysis of the LNA

4.3.2 AC Analysis

AC analysis focuses on the small-signal response of the LNA, verifying the gain, bandwidth, and linearity. Here is the ac schematic of it as well as the gain plot (LNAs plot).

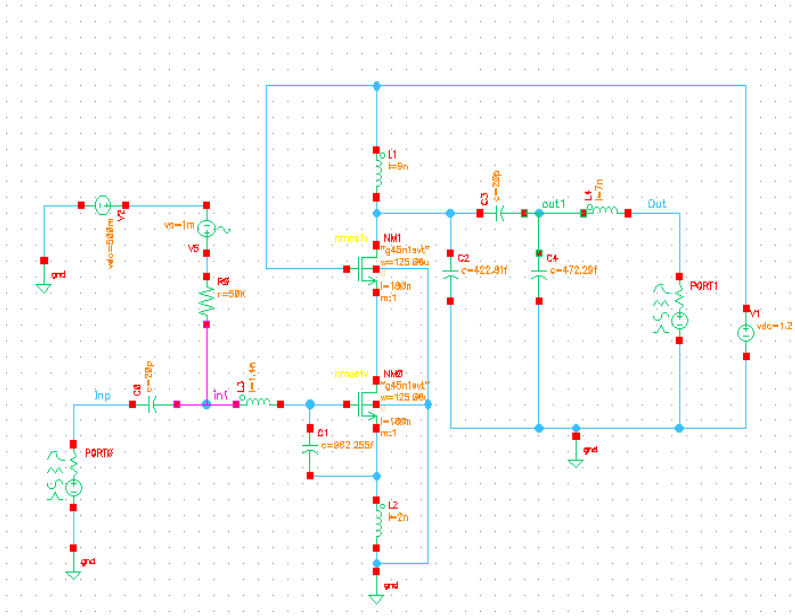

Figure 4.7: AC Schematic of the LNA

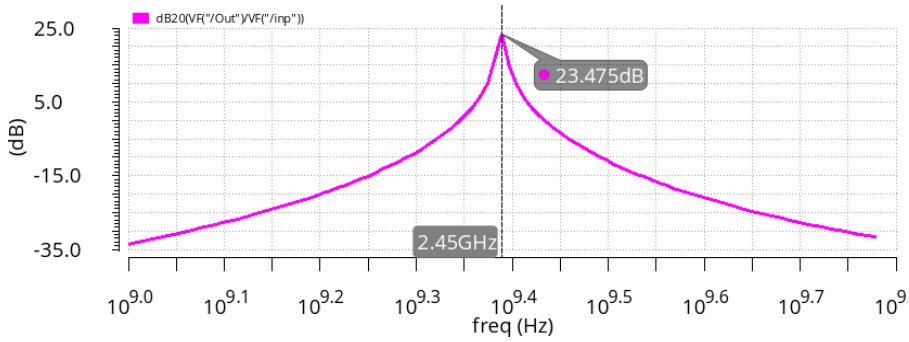

Figure 4.8: Maximum Gain at 2.45GHz

4.3.3 Transient Analysis

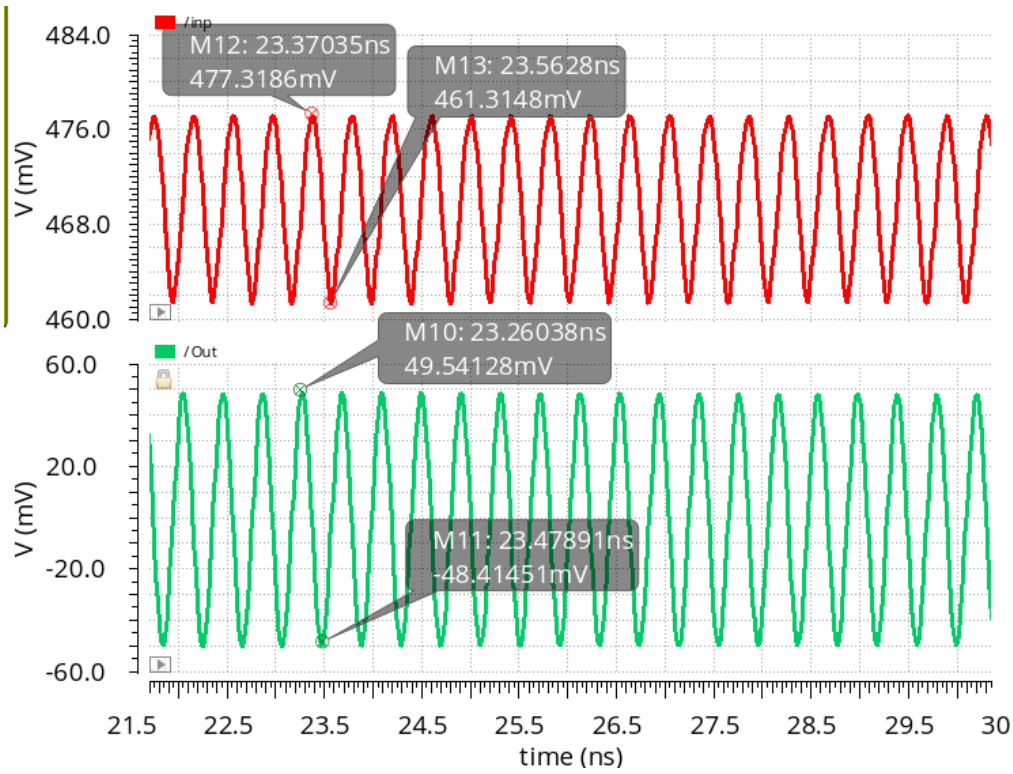

Figure 4.9: Time varying Signal (Input 1mV Signal)

Gain Calculation from transient analysis,

$$A_v = 20\log_{10}\left(\frac{(49.541 + 48.414)mV}{(477.318 - 461.314)mV}\right) \quad [64]$$

$$A_v = 16.3\ dB$$

4.3.4 S-Parameter Analysis

S-parameters are studied to investigate the input and output reflections, return loss, and signal integrity of the system. The S-parameter plots for S11 (Input Reflection Coefficient), S22 (Output Reflection Coefficient), without losing general but fundamental observation, are below mentioned: S21 (Forward Transmission Gain), and S12 (Reverse Trans- mission Gain).

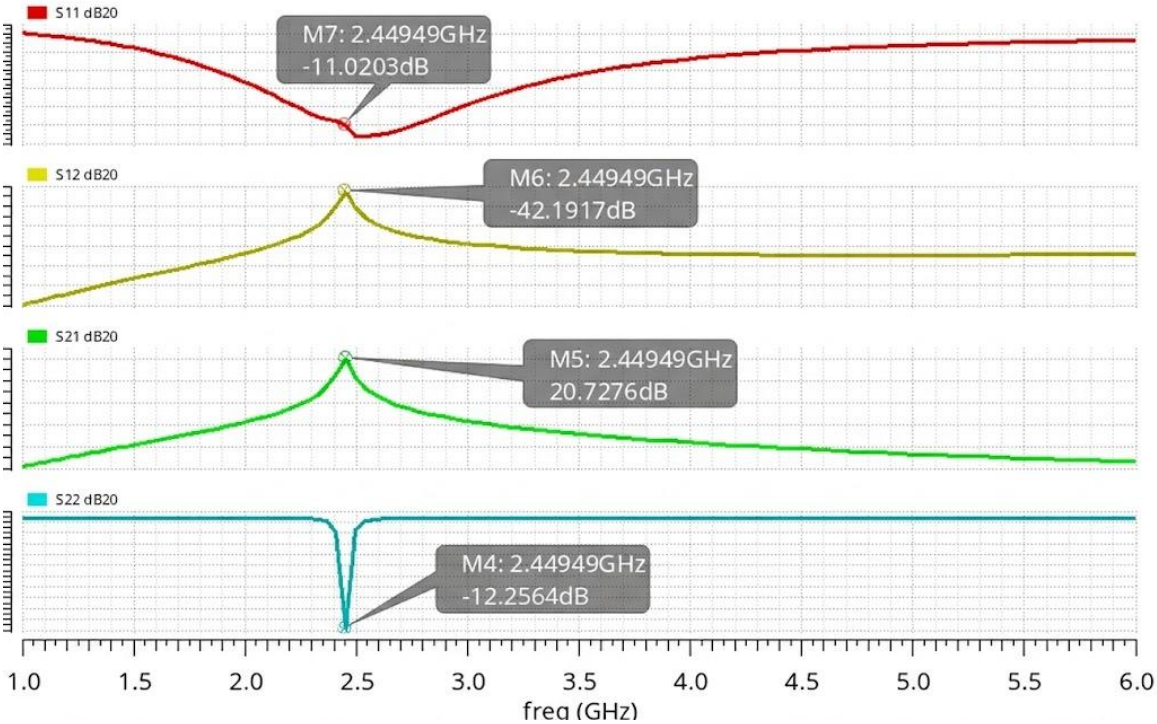

Figure 4.10: S11, S12. S21, S22 Waveform

4.3.5 Stability & Noise Figure Analysis

The noise figure analysis checks the noise contribution of the LNA and stability check the oscillation occur, or not.

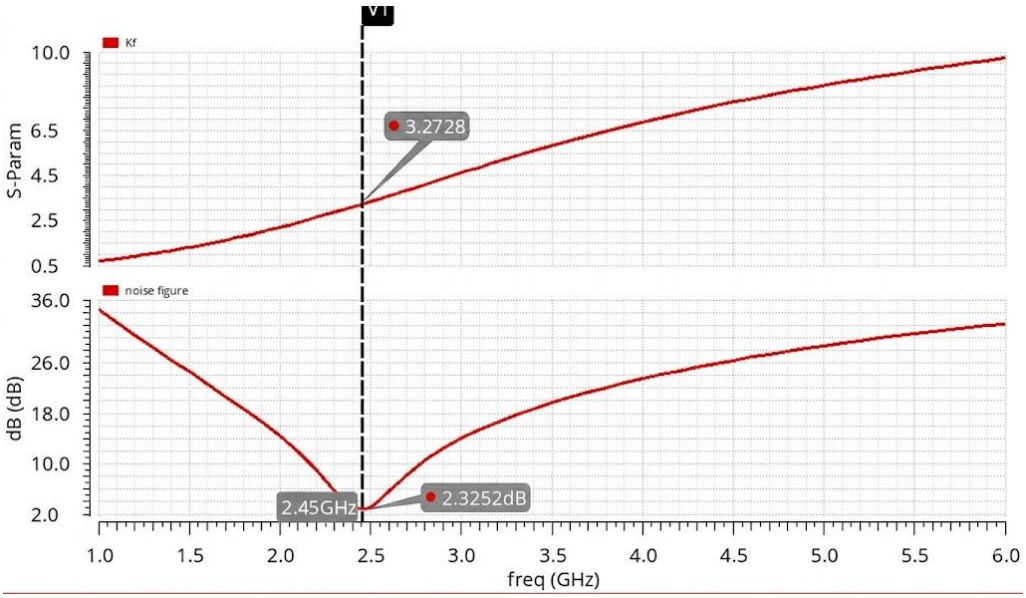

Figure 4.11: Noise figure (dB) = 2.3 dB & Kf =3.27

4.3.6 Analysis

The simulation data will be matched to the LNA specifications provided in the table below.

Table 8: LNA Specification vs Simulation Results

Parameter	Specification	Simulation Result
Supply Voltage	1.2 V	1.2 V
Frequency	2.45 GHz	2.45 GHz
Noise Figure (NF)	< 2 dB	2.3 dB
Gain	15–20 dB	23 dB
S11 (Input Return Loss)	≤ -10 dB	-11 dB
S22 (Output Return Loss)	≤ -10 dB	-12 dB
S21 (Forward Gain)	15–20 dB	20 dB
S12 (Reverse Isolation)	≤ -25 dB	-42 dB

4.3 Mixer

4.4.1 Schematic Design

The schematic design of the Mixer is shown below to depict the configuration before performing any analysis.

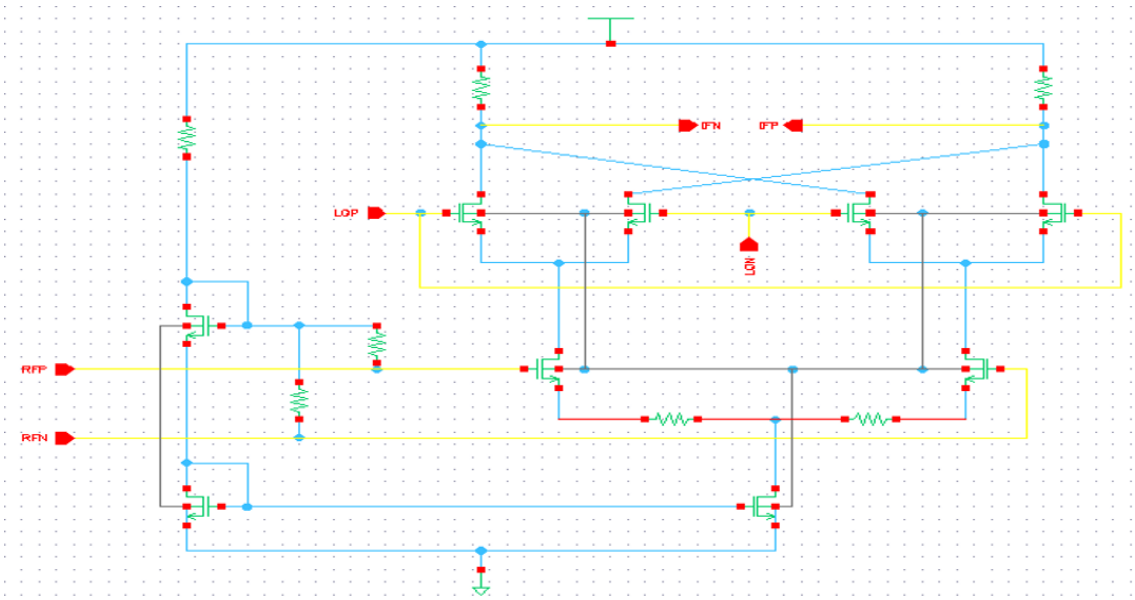

Figure 4.12: Schematic Design of the Mixer

4.3.2 Mixer with Low Pass Filter (LPF)

In communication systems, the Mixer and LPF are combined together to be very important. The mixer is in charge of translating the frequency of the incoming signal to an IF, whereas the LPF affords the trans- mission only with desired frequencies by cutting off some unwanted high-frequencies. This arrangement is essential to reduce noise and enhance the quality of the signal.

The mixer operation is based on mixing the high-frequency RF signal with a LO signal for generating the IF signal. Following the mixing stage, the LPF is used to strip off high frequency components while retaining only the desired lower frequencies.

The primary function of the LPF is to filter out the unwanted sum frequency generated by the mixer, ensuring that only the difference frequency (the desired IF) reaches the next stage in the receiver.

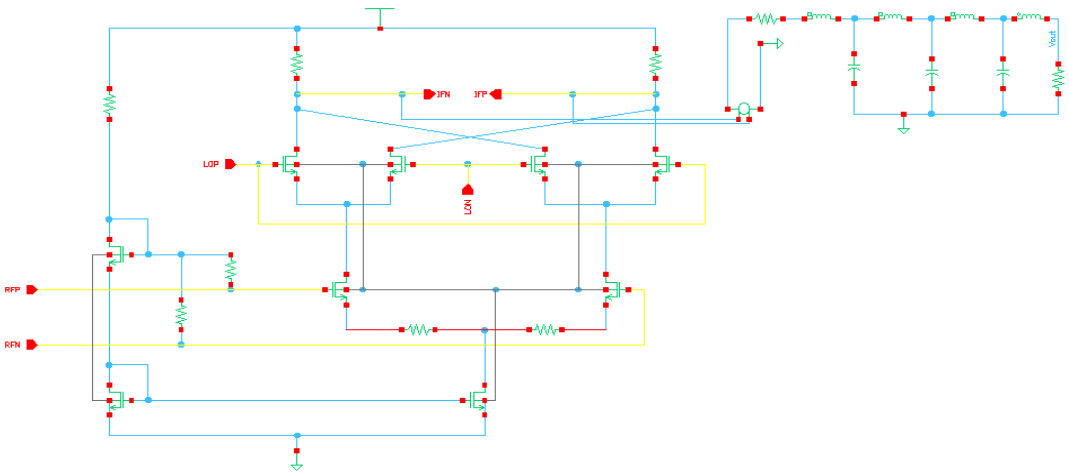

Figure 4.13: Schematic Design of the Mixer with Low pass Filter

4.3.3 Test Bench

The circuit and simulation for the mixer design is described below, in which various RF signals are injected to the mixer and see response of the output. In this configuration the conversion gain, isolation and harmonic suppression are measured.

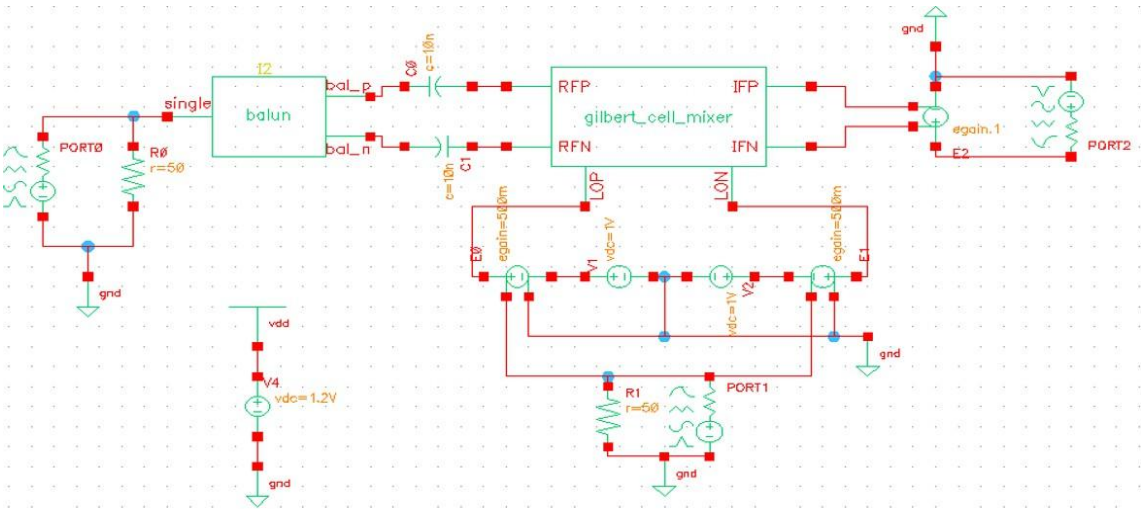

Figure 4.14: Mixer Simulation Test Bench

4.3.4 Transient Analysis for Mixer

A transient analysis for the mixer design is necessary to assess the time-domain behavior of the system. The proposed approach assists the validation of the frequency conversion performance, signal distortion and overall behavior under different input conditions.

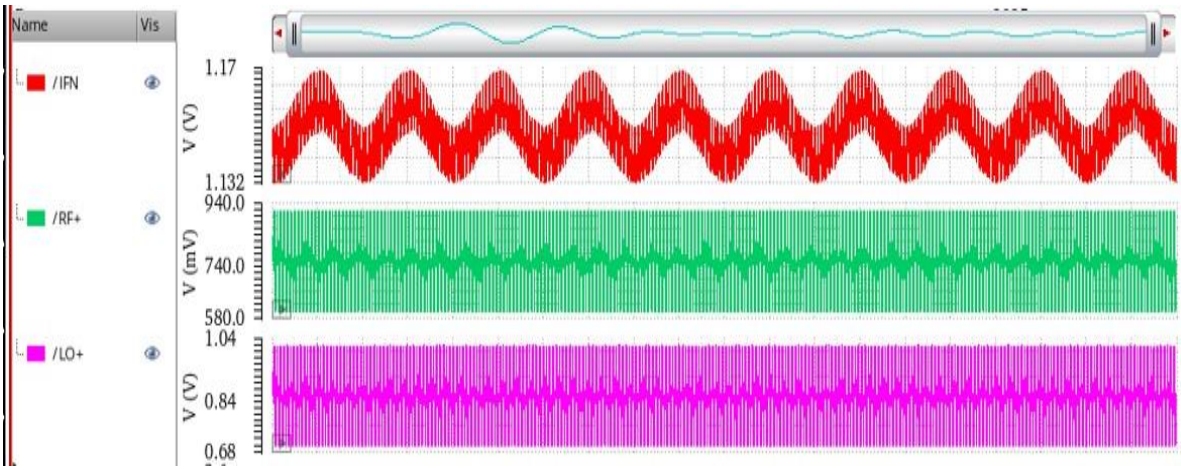

[a]

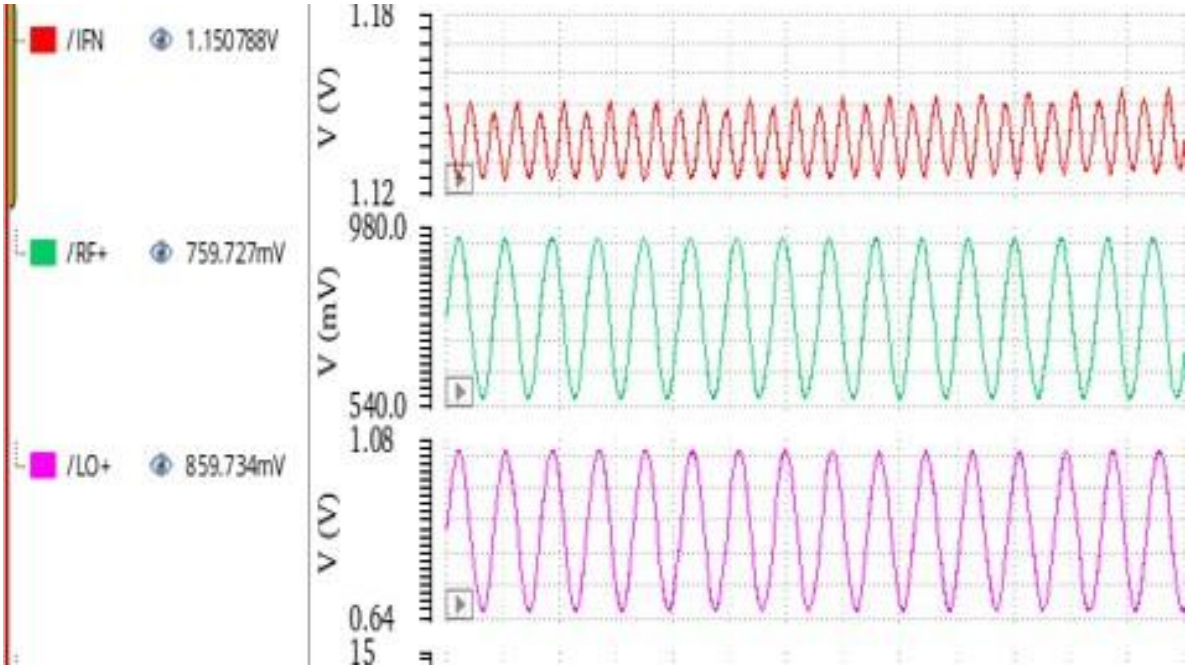

[b]

Figure 4.15: [a][b] Transient Analysis for Mixer

RF frequency f_{RF} = 2.45 GHz LO frequency f_{LO} = 2.43 GHz

The sum frequency is: $f_{SUM} = f_{RF} + f_{LO}$ = 4.88 GHz (This is the carrier) [65]

The difference frequency is: $f_{IF} = |f_{RF} - f_{LO}|$ = 20 MHz (This is the envelope) [66]

4.3.5 Mixer with Low Pass Filter (LPF) Analysis

The process of using the transient analysis to analyze Mixer with LPF design and observe its output is described. The low pass filter eliminates unwanted high frequency elements, and allows only IF as the desired output. Mixer with LPF analysis is-

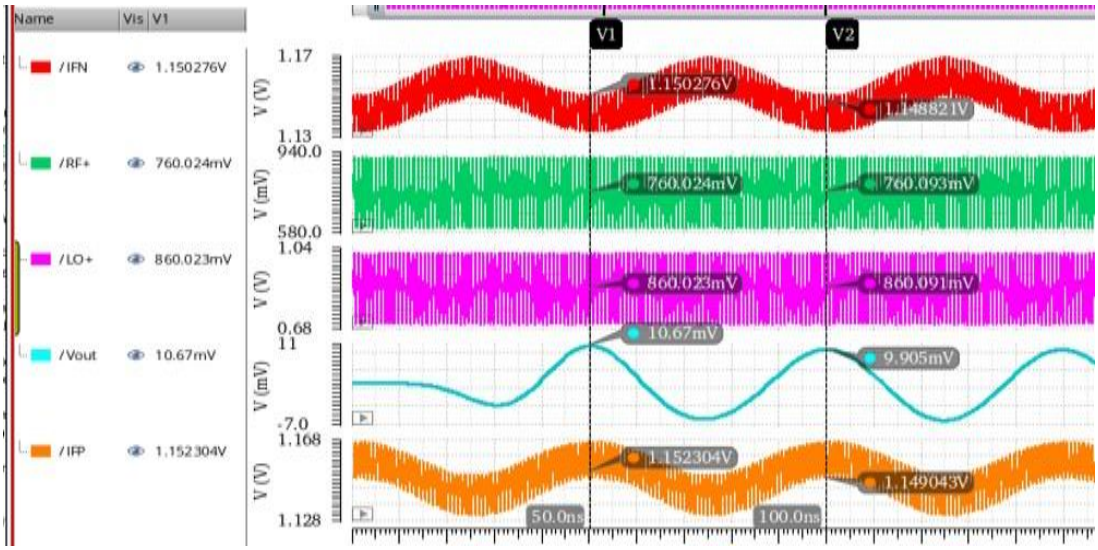

Figure 4.16: Transient Analysis of Mixer with Passive LPF

4.3.6 Voltage Conversion Gain vs LO Signal Power

The voltage conversion gain is a figure of merit which demonstrates how efficient the mixer converts the input RF signal at desired IF. The voltage conversion gain is plotted against the LO signal power in the figure below.

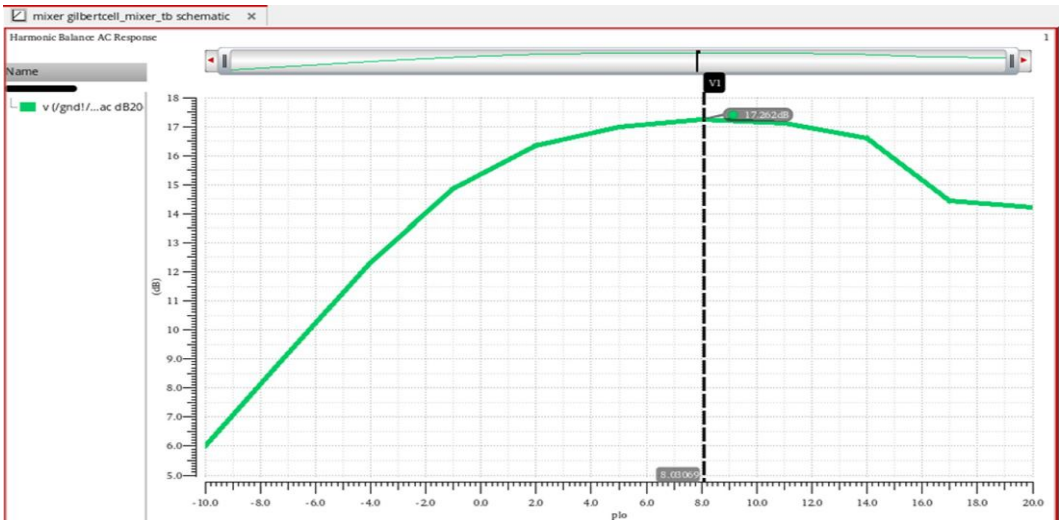

Figure 4.17: Voltage Conversion Gain vs LO Signal Power

The conversion gain individually obtained with the mixer is small than its expected one, but it would be improved by design modification. However, both the isolation and harmonic suppression were valid and therefore the overall performance was presented as acceptable.

4.4 Low Pass Filter (LPF)

4.4.1 Schematic Design of Passive Filter

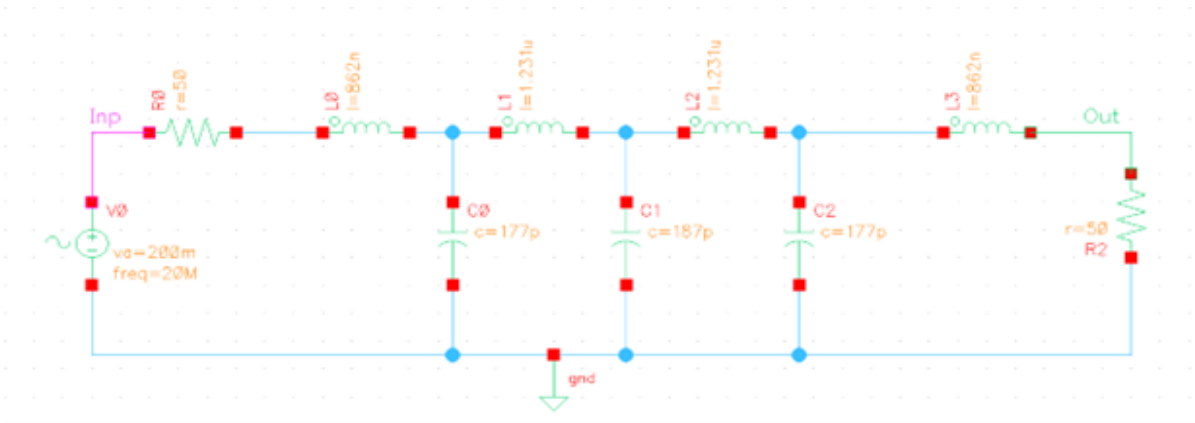

Figure 4.18: 7th Order Passive Low Pass Filter Circuit Design

4.4.2 Transient Analysis of Passive LPF

Transitory response of passive LPF Filter The study of the transitory response of the passive LPF filter consists on investigation of the behavior and performance of the filter in time domain when a signal is applied to it. Filter performance is studied by determining the response of the networks to step, sinusoidal signals and other interesting waveforms.

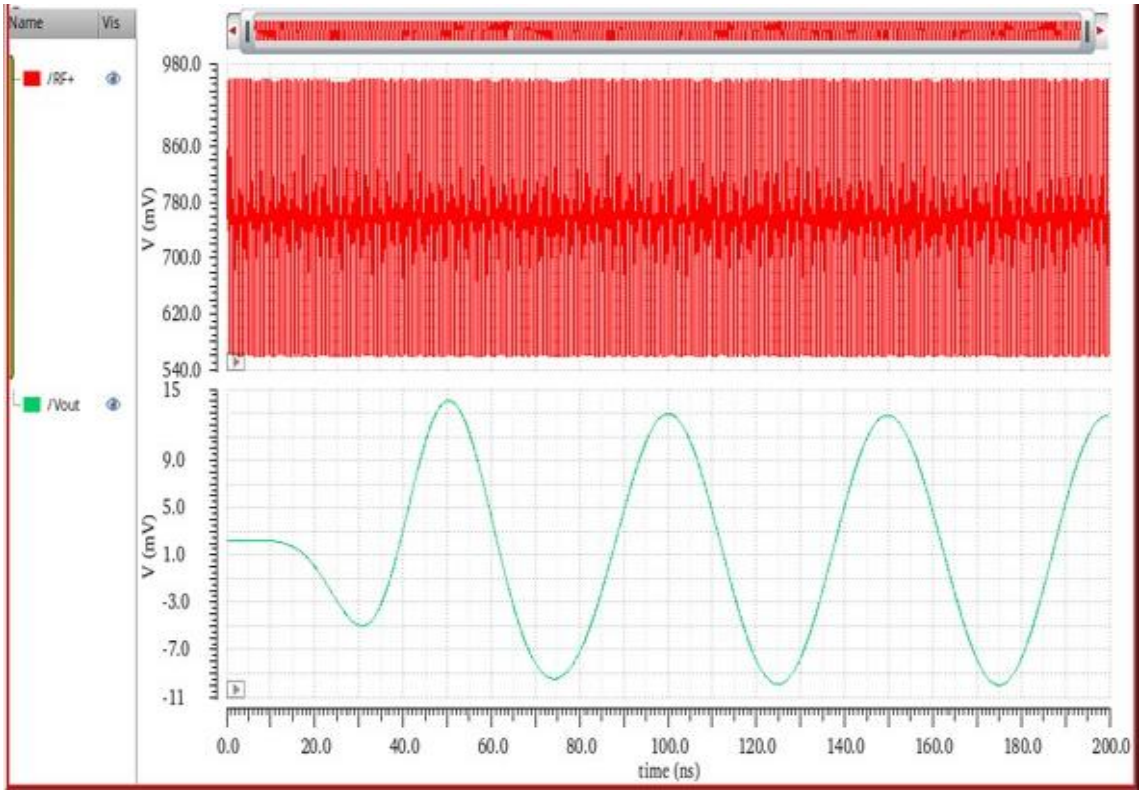

Figure 4.19: Transient Analysis of Passive LPF

4.4.3 AC Analysis of Passive LPF

The review of the AC section indicates how the passive low-pass filters react to sinusoidal inputs of different frequency and response of the filter at the passband and stopband.

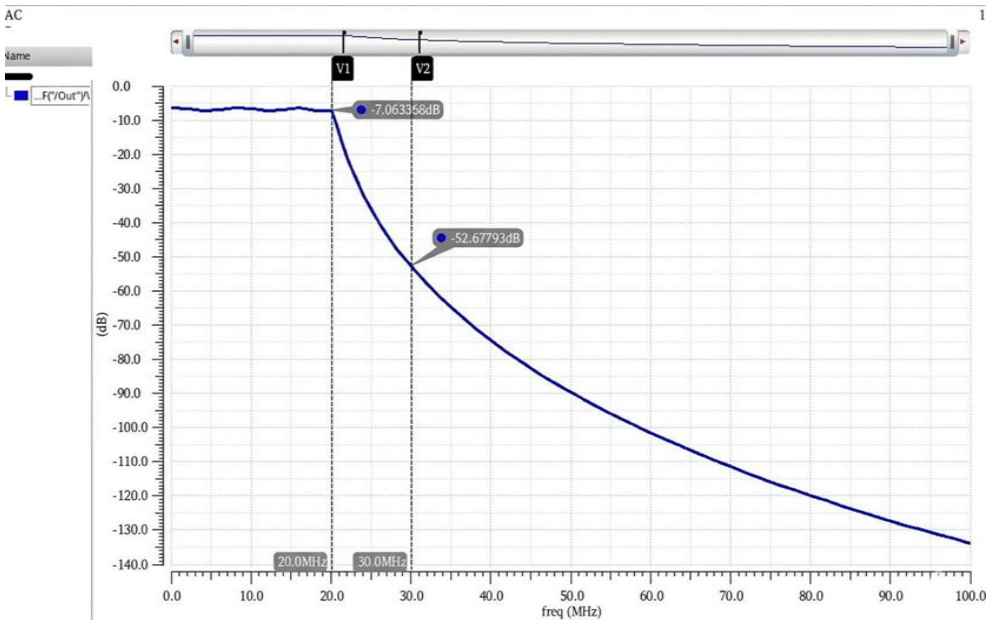

Figure 4.20: Figure 4.20: AC Analysis of Passive LPF Filter

4.4.4 Schematic Design of 1st Order Active LPF

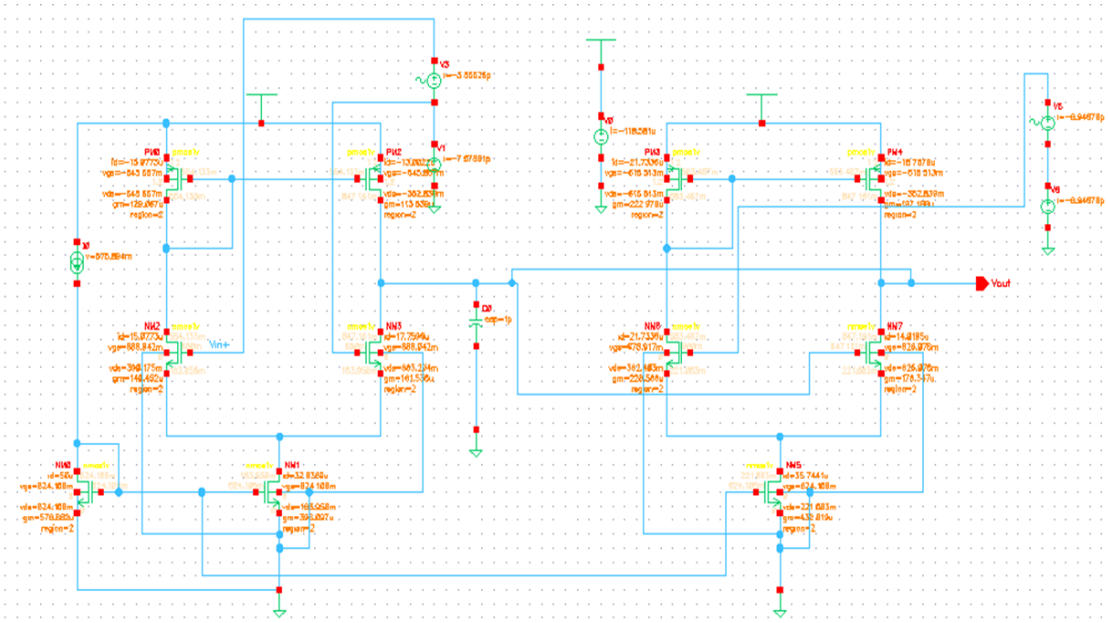

Figure 4.21: Schematic Design of 1st Order Active Filter

4.4.5 Transient Analysis of Active LPF

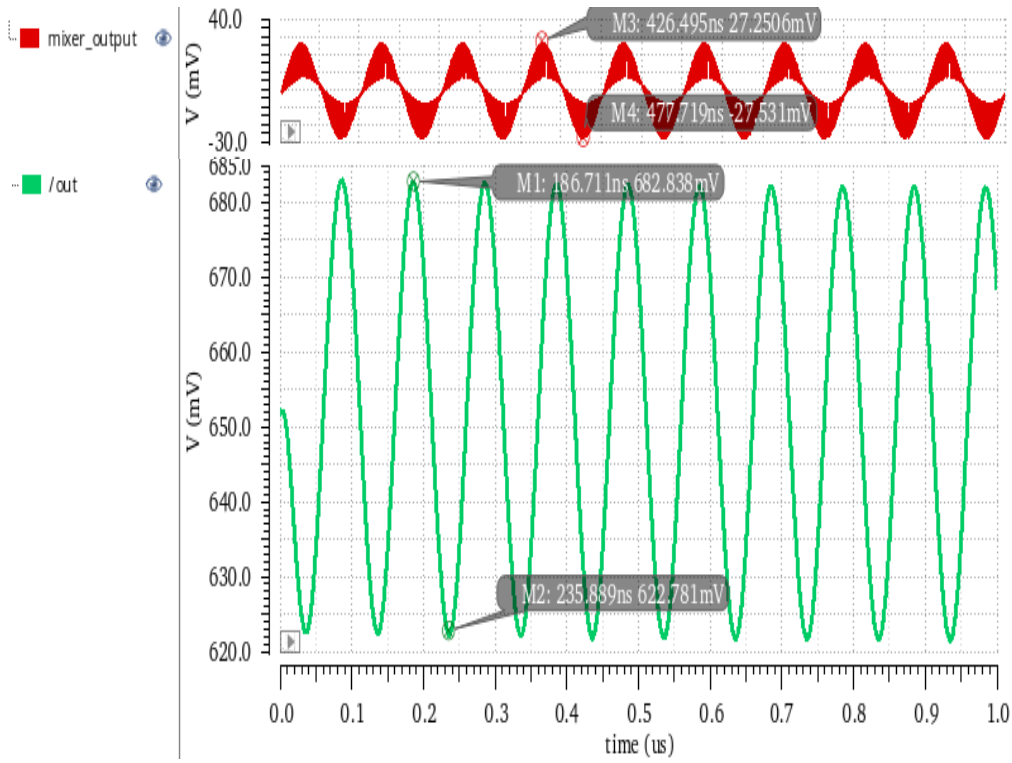

Figure 4.22: Transient waveform

4.4.6 AC Analysis of Active 1st Order LPF

In the active LPF filter, it is considered also a frequency response with active device such as an operational amplifier or a transconductor. The active filter also is tunable and exhibits better performance, namely gain, and linearity.

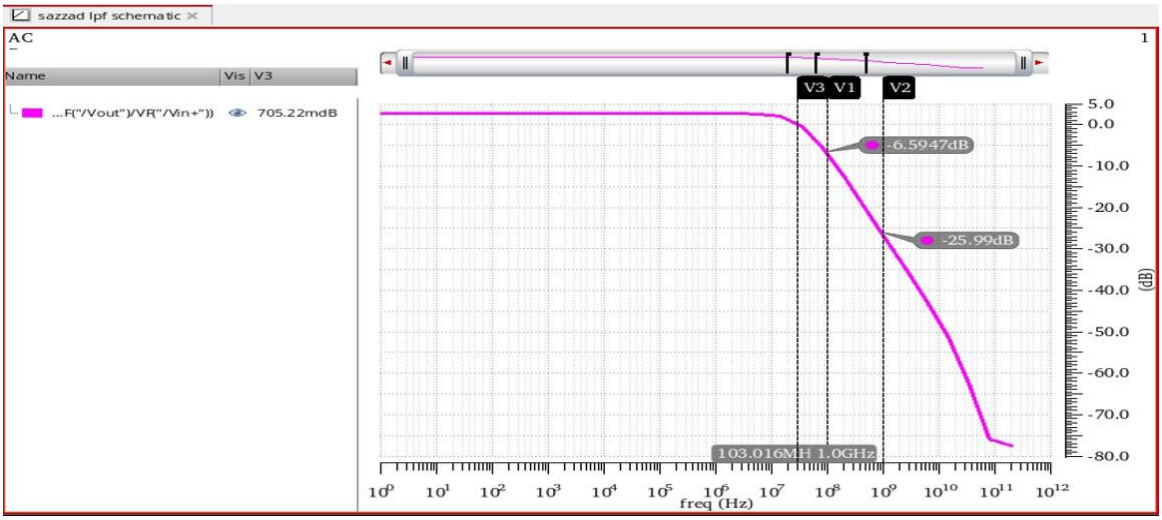

Figure 4.23: AC Analysis of Active LPF Filter

4.4.7 Schematic Design of 2nd Order Active LPF

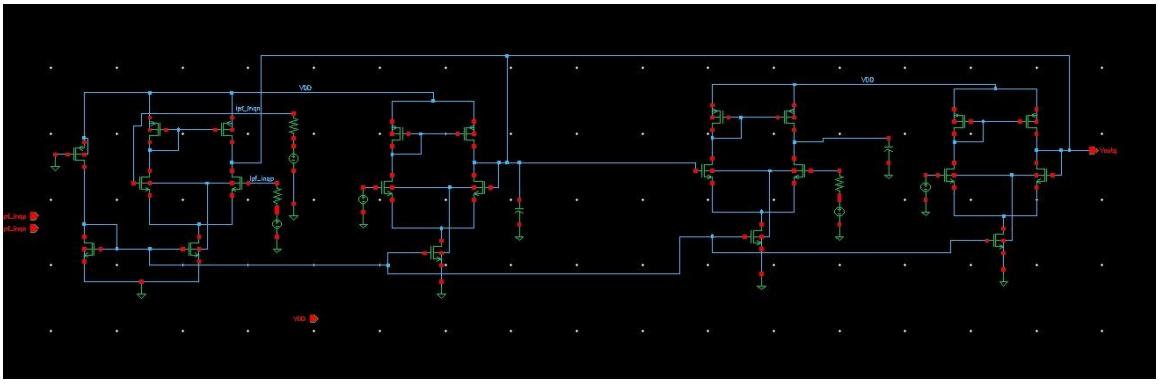

Figure 4.24: Schematic Design of 2nd Order Active Filter

4.4.8 AC Analysis of Active 2nd Order LPF

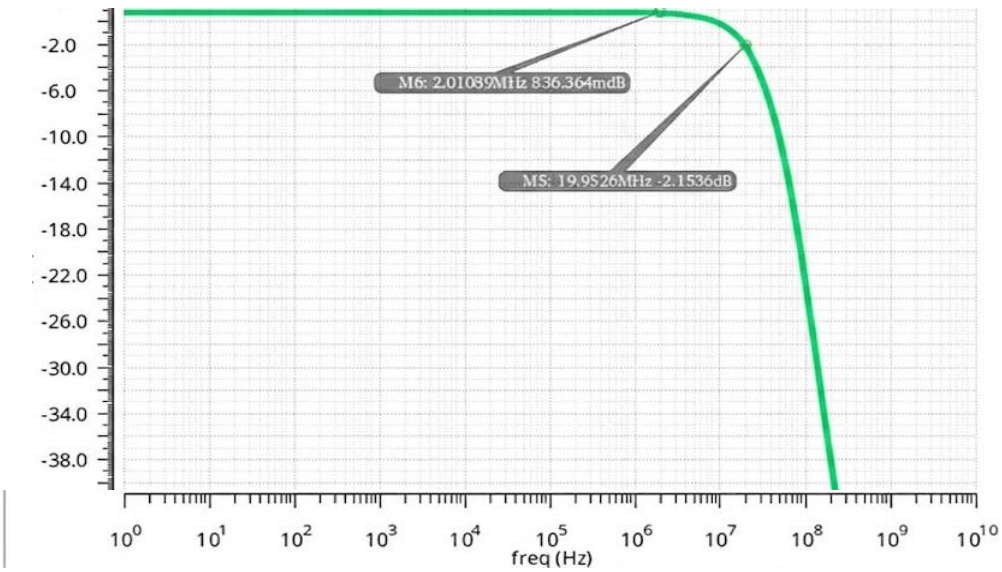

Figure 4.25: AC Analysis of 2nd Order Active LPF Filter

4.5 Integrated RF Receiver Analysis

4.5.1 Complete System Integration and Test Setup

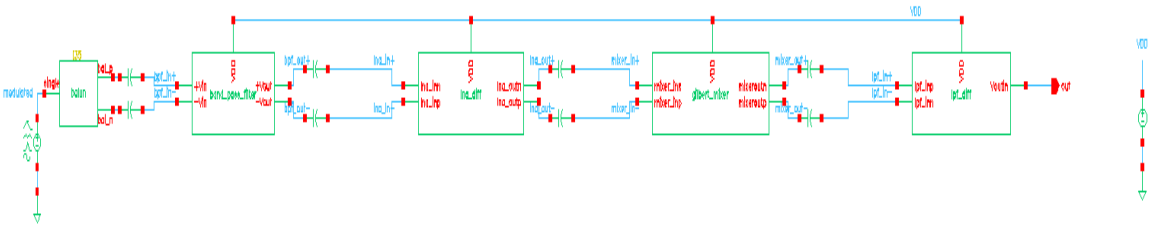

Figure 4.26: Schematic Design of the System

The individual RF blocks (BPF, LNA, Mixer, and LPF) were cascaded in a differential configuration to form the complete 2.45 GHz receiver chain. A Double-Sideband Suppressed-Carrier (DSB-SC) modulated signal was used as a test input to the system, simulating more real-world communication scenarios.

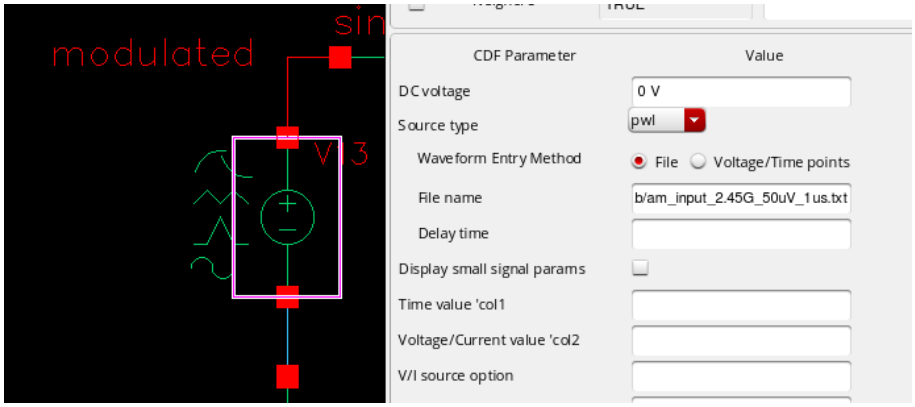

Figure 4.27: Inserting Modulated Signal

A modulated signal was created in MATLAB, using a 10 MHz message and a 2.45 GHz carrier frequency, at an input amplitude of 50µV, which served as the transmitted data in the form of text file that was fed into Cadence schematic through Piecewise Linear (PWL) voltage source followed by ideal balun to convert single ended input to differential for the BPF stage.

4.5.2 Time-Domain (Transient) Analysis

A detailed transient analysis was done for observing the signal envelope and amplification at each of the receiver chain nodes.

- RF Front-End Progression: The 50µV input DSB-SC signal is filtered with the Band-Pass Filter and then forwarded to the Low Noise Amplifier. The time-domain waveforms are consistent with the fact that the signal envelope is still undistorted for this high-frequency amplification process.

- Down-Conversion and Recovery: The RF amplified signal is input into the mixer, which multiplies it with the Local Oscillator (LO). As you can see in the waveform, it is a complex signal with sum and difference frequencies. The Low-Pass Filter then separates the baseband information, yielding a clean, reconstructed 10 MHz sine wave.

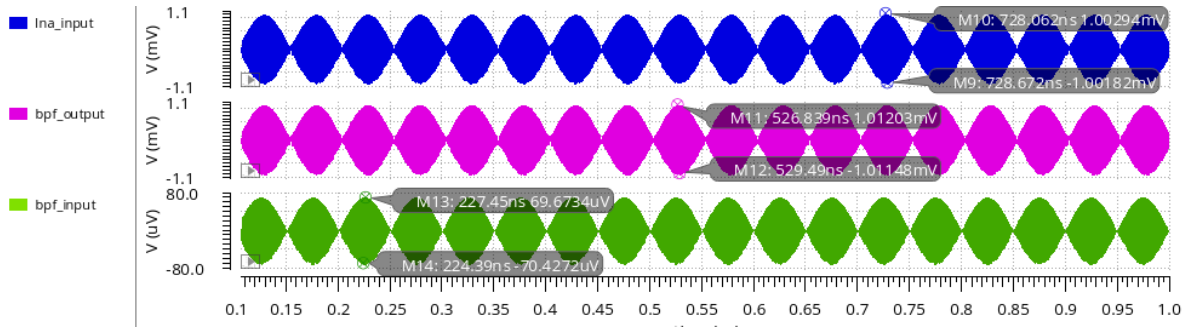

[a]

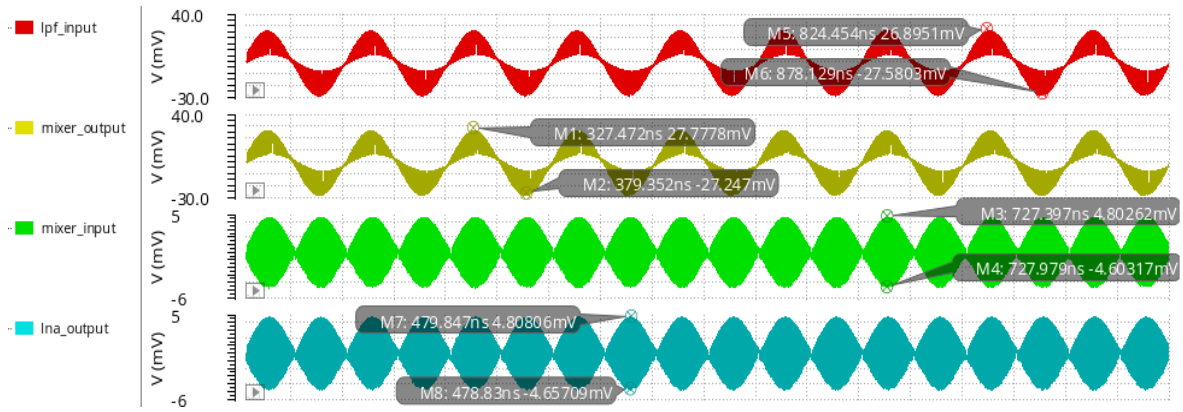

[b]

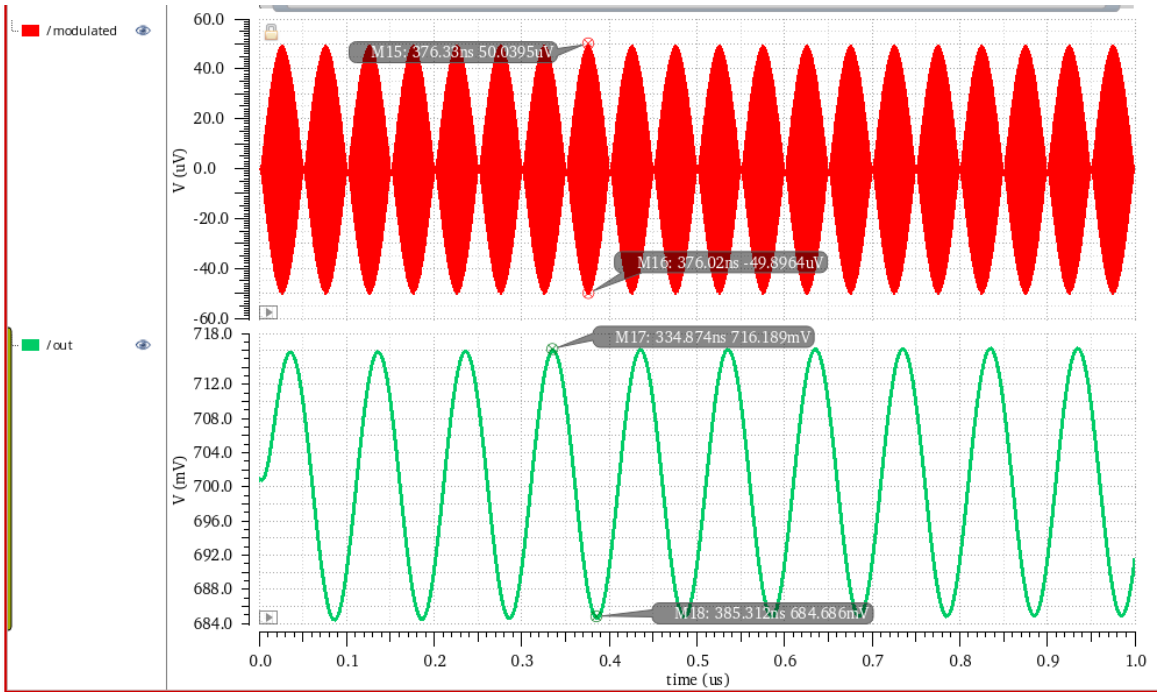

[c]

Figure 4.28: [a][b][c] Transient Analysis

Total Conversion Gain:

Using the peak-to-peak voltages of the input and final recovered output, we calculated the overall voltage conversion gain (A_v) for the cascaded receiver. The peak-to-peak input voltage is 100µV and the recovered output from the transient results is 31.5mV.

$$A_v = \frac{V_{out(peak_to_peak)}}{V_{in(peak_to_peak)}} = \frac{31.5 \times 10^{-3}}{100 \times 10^{-6}} \approx 315 \qquad [67]$$

And when this linear voltage gain is converted to decibels, the result is quite impressive: an overall system gain of 50 dB.

4.5.3 Frequency-Domain (DFT) Analysis

To ensure that the incoming signal was correctly translated and any unwanted frequencies rejected, a Discrete Fourier Transform (DFT) of each major node was taken.

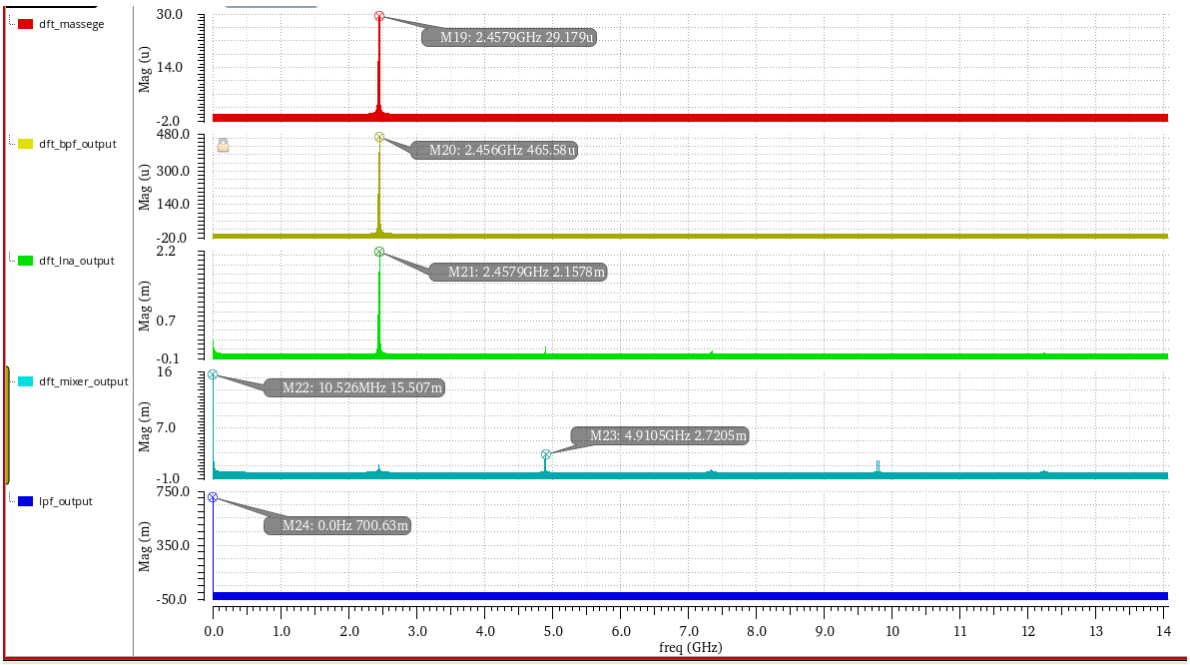

Figure 4.29: DFT Analysis

- The spectrum of the original message shows a very sharp peak at 10 MHz.
- Observe at the BPF and LNA outputs, how well centered around the 2.45 GHz carrier frequency, is our spectrum thereby demonstrating frontend selectivity.

- The dft_mixer_output shows the baseband IF component near 10 MHz and high-frequency mixing products (e.g., in the vicinity of 4.9 GHz)
- In the end, lpf_output spectrum shows that all the HF harmonics and LO leakage is perfectly suppressed, only 10 MHz baseband tone present. This verifies the success of our 3rd-order LPF design.

4.5.4 System Linearity and SNR

It was then cracked open to study the noise floor, and linear operating range of this receiver in this maximum performance assessment.

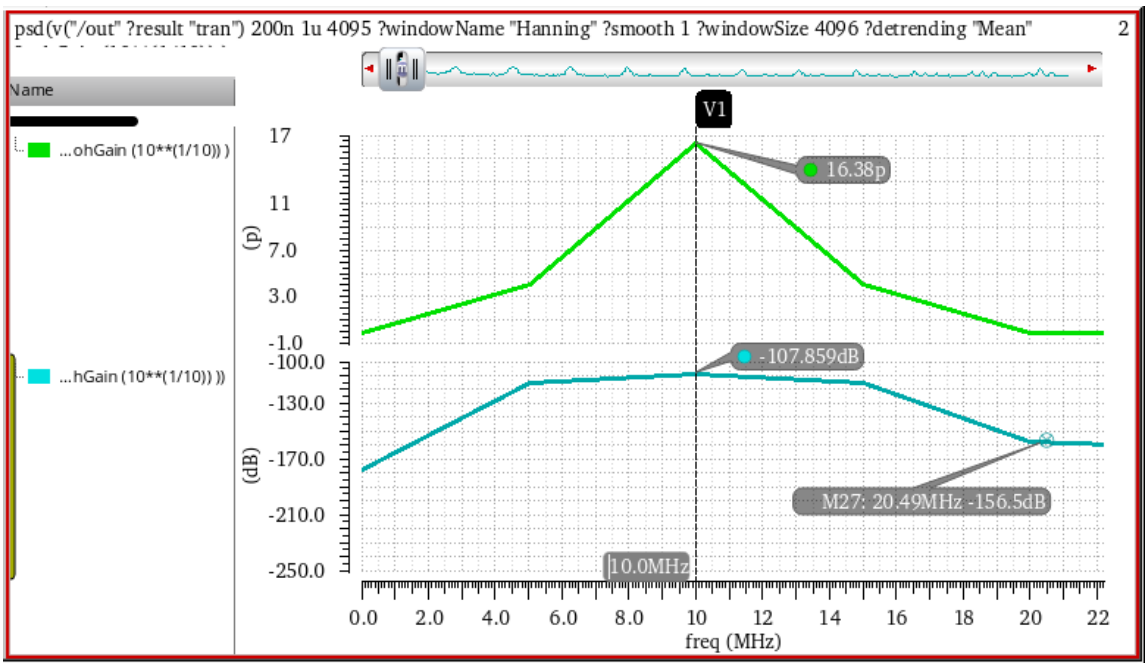

Figure 4.30: PSD Analysis

Signal-to-Noise Ratio (SNR): Measurement of noise performance was done with Power Spectral Density (PSD) investigation. The signal power was measured at -107.85dB and the noise floor was at -156.5db

$$SNR_{dB} = P_{signal} - P_{noise} = -107.85\text{dB} - (-156.5\text{dB}) \approx 49\text{dB}$$

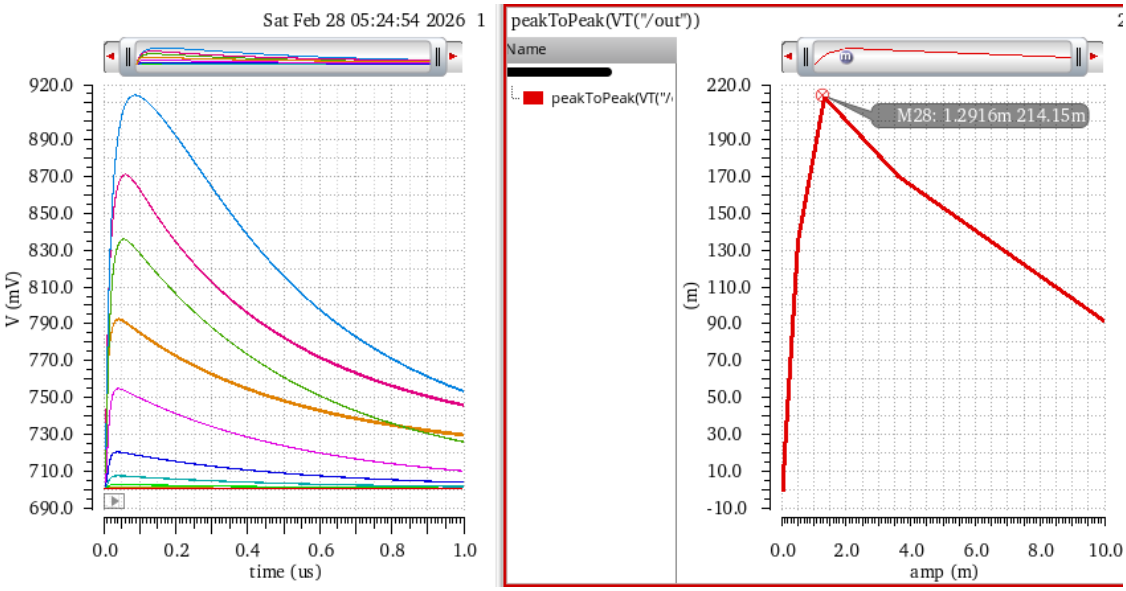

Figure 4.31: Linearity Analysis

Linearity Range: Linearize to Extract the 1-dB Compression Point From 1µV to 1.3mV, and the receiver gives a nice linear response. After a certain point, approximately 1.3mV of input the active devices go into saturation (cut-off) and compress gain. Output Amplitude vs. Input Amplitude - Linearizing to Find the 1-dB Compression Point From 1µV to 1.3mV the receiver maintains a nice linear response. Beyond about 1.3mV of input, the active devices start to saturate (cut-off) and gain is compressed.

4.5.5 System Selectivity and Interference Rejection (FDM Analysis)

In a more realistic wireless environment, the desired RF signal is always present along with many out-of-band jammers. An FDM scenario was obtained to evaluate how often frequency selectivity appeared at the receiver end and how resistant it was with respect to this interference.

FDM Test Setup

A composite was used to input signal injected into the receiver instead of one carrier This signal had a wanted carrier at 2.45 GHz (a message signal at 15 MHz), with strong out-of-band interfering carriers centered at 5 GHz and 10 GHz, overlaid. The input was at a default amplitude of 100µV.

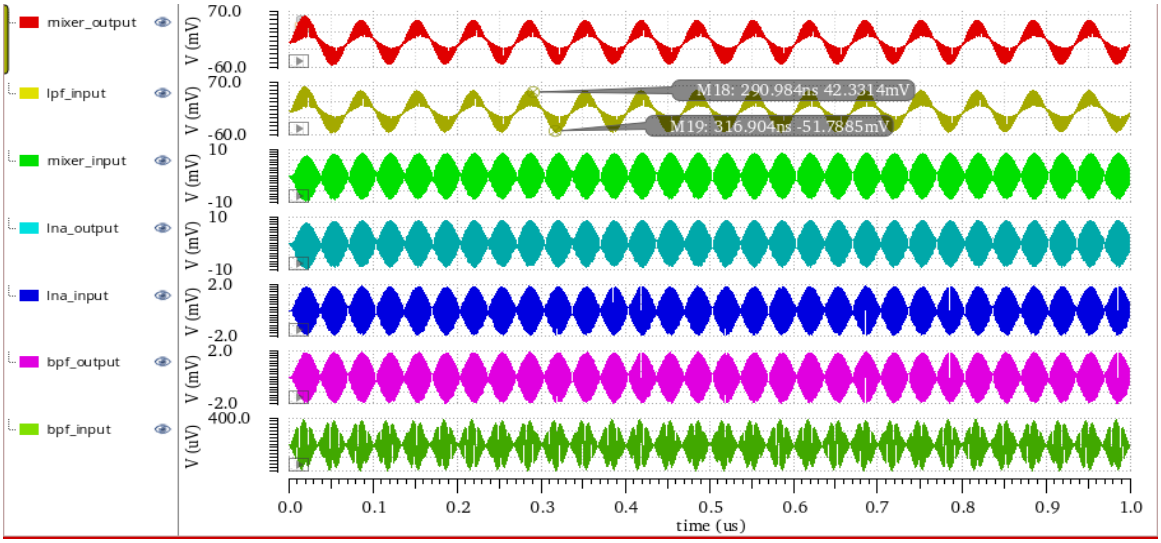

Figure 4.32: Transient Analysis

Frequency-Domain (DFT) Proof of Selectivity

The DFT analysis provides a tangible example of the filtering characteristics that are imparted by the receiver at each stage in the cascade:

- Composite Input Spectrum: The input dft_massege spectrum is a clear representation of the three separate peaks, respectively containing the wanted signal at 2.46 GHz and two large interferers at about 5 GHz and 10 GHz.

- Rejection to BPF Out-of-band: All the blockers at 5 GHz and 10 GHz are suppressed entirely on the dft_bpf_output node by Band-Pass Filter. Only pass through signal on 2.46 GHz It is very high Q-factor and chosen to develop LC matching and filtering topology.

- SDF Isolation: As observed at spectrum lpf_output, a single isolated peak from the down converted mixer indicates that high-frequency LO leakages and interferers are completely brought out due to the 3rd-order LPF.

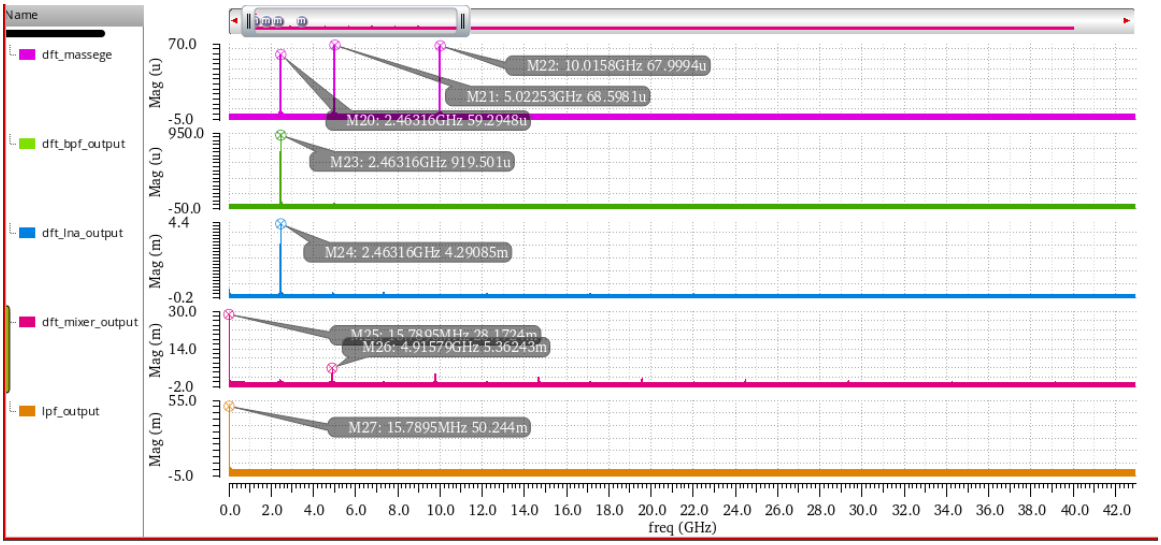

Figure 4.33: DFT Analysis

4.5.6 Time-Domain (Transient) Signal Recovery

The transient analysis also confirms system stability in the presence of FDM:

Frontend Filtering: The first bpf_input waveform is quite dense and distorted because it contains interleaving 2.45 GHz, 5 GHz and 10 GHz frequencies. But just after BPF (bpf_output), the waveform has returned to the recognizable "clean" envelope of a single frequency, modulated carrier.

Message Reconstruction: Even with the aggressive interference present at input only through the recovered output. We are able to construct a whisk clean 15 MHz sine wave.

Voltage Amplification: The recovered timing 15 MHz baseband signal on oscilloscope - peak to peak approx 100mV (somewhere between -50mv and +50mV). In addition, we see that the receiver not only provides very large rejection of blockers but it also delivers significant gain to the signal channel provided with a 100µV input.

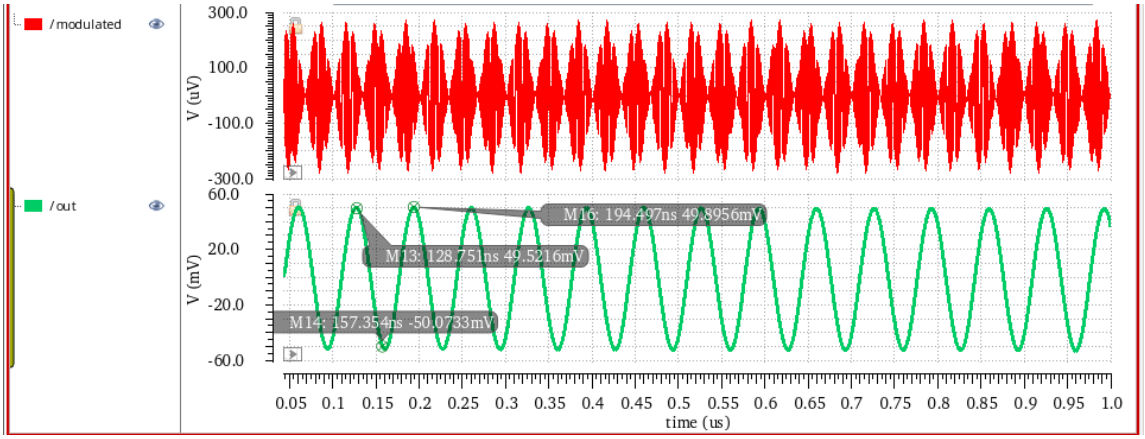

Figure 4.34: Transient Analysis

4.5.7 I/Q (In-phase & Quadrature) Demodulation Architecture

The receiver uses an integral quadrature demodulation topology to accommodate the later modern complex modulation schemes (such as 16-QAM), by which data is radiated through phase and amplitude changes.

I/Q Architecture Implementation

The amplified RF signal produced by the LNA progresses through two identical parallel paths as illustrated in the system schematic. A standalone active mixer is then followed by a low-pass filter on each branch.

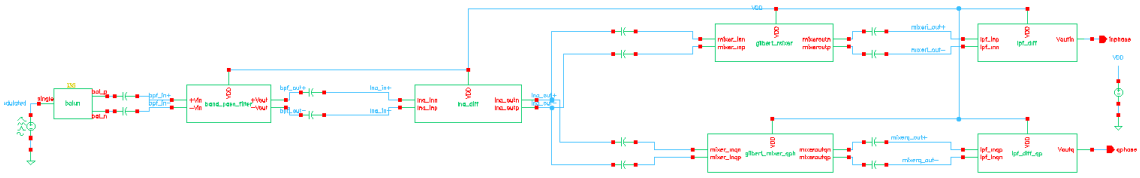

Figure 4.35: Schematic Design of the I/Q Structure

In-phase (I) Channel: The desired phase reference is then provided to the upper mixer via a LO.

Quadrature (Q) Channel: The lower mixer is driven by an LO signal phase shifted with respect to the I-channel LO.

Orthogonal down-conversion thus enables the real and imaginary parts of any incoming complex RF wave to be separately mapped into quadrants.

4.5.8 Single Tone I/Q Transient Response

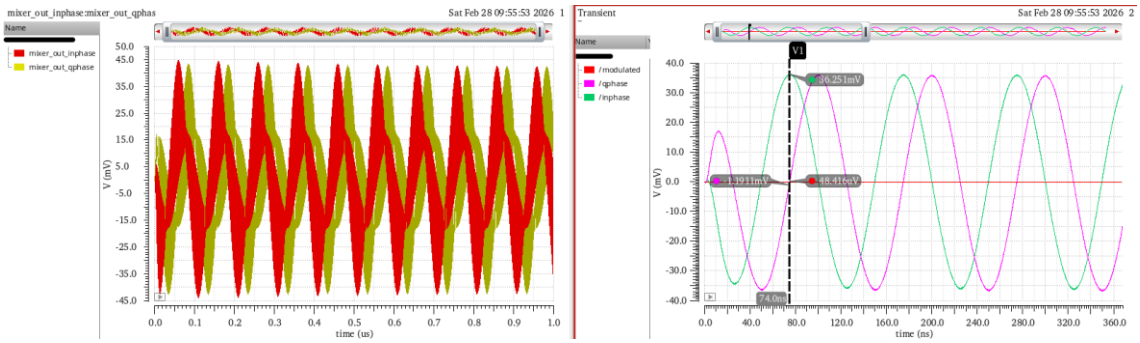

Figure 4.36: Transient Analysis of Single Tone Test

A single-tone test was performed to observe Time-Domain response of the I/Q channels as well as measure phase alignment.

- The outputs received directly from the dual mixers (mixer_out_inphase and mixer_out_qphase) contain numerous high frequency components, which appear quite complex.

- Both I (green) and Q (purple) channels are recovering nice clean baseband sinewaves after the respective Low-Pass Filters.

- At a closer look with respect to time-domain plot it is Clearly visible that there is a distinct time lag where the two waves appear to reach their highest amplitude. The time lag was customized and tuned to a quarter of the cycle, which is an accurate phase difference needed for correct quadrature reconstruction.

4.5.9 Gain and Phase Error Verification

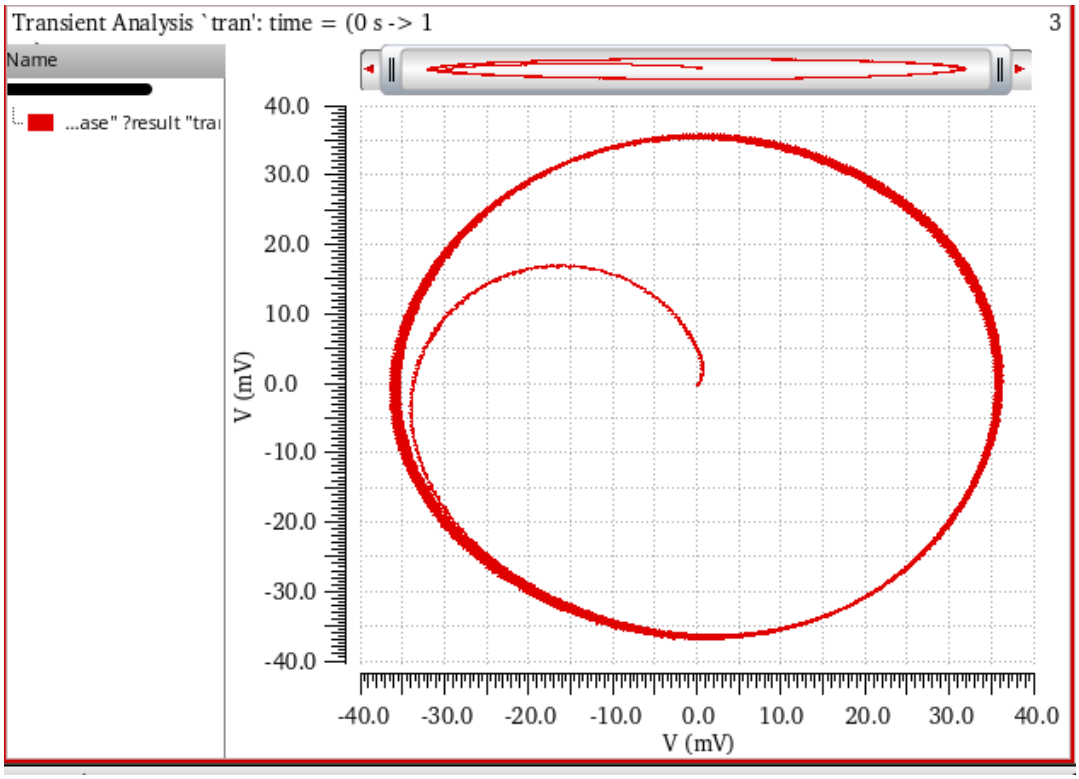

Figure 4.37: Lissajous Pattern

For data to be decoded properly by a quadrature receiver both the channels need to have the same gain and the phase difference between them needs to be strictly 90°. This was demonstrated mathematically by plotting a transient amplitude of I-channel and Q-channel in XY plot to form Lissajous curve.

- The plot you get is a continuous, perfectly symmetric circle.

- This geometric circle is also the definitive validation for two of the most important figures of merit (FoM's) that have been implemented in a receiver 0 dB gain mismatch (confirming that both matching LPF and Mixer provide exactly same value addition to the flow), and a 0deg. phase error assuring complete orthogonality. Gains would result in an ellipse and phase error would tilt the axis of that shape.

4.5.10 Digital Modulation Recovery: QPSK Analysis

It was performed in order to validate the capable functionality of the receiver regarding modern digital communication standards; it is assumed that a QPSK modulation scheme will be used. However, you can use that as a trick by sending QPSK which is a digital modulation with no ambiguity and sends two bits per symbol (modifies the carrier signal to 4 phase stands) Therefore it becomes more spectral efficient.

QPSK Transient Response

The TD transient analysis proves that we can successfully extract the continuous stream of digital symbols.

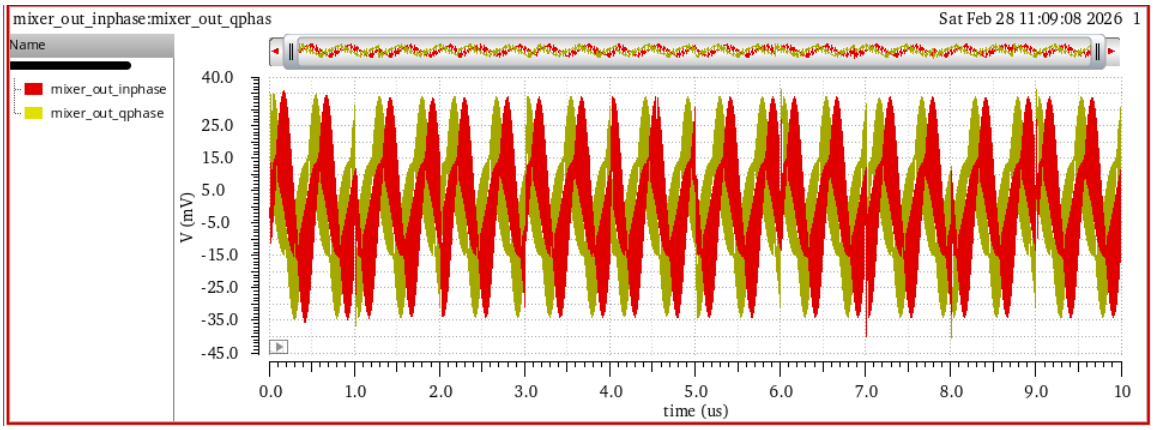

Figure 4.38: Transient Analysis of QPSK

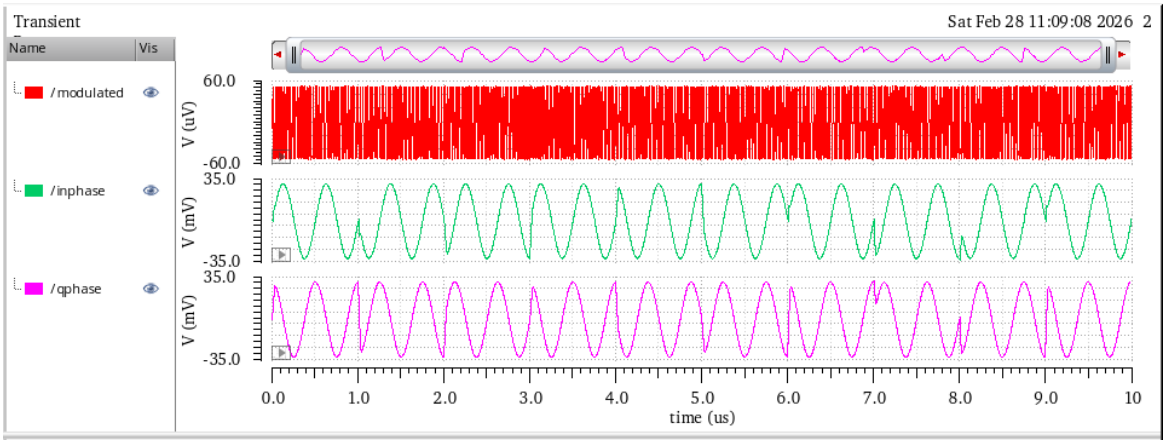

Figure 4.39: Transient Analysis

- Raw outputs of differential mixers (mixer_out_inphase and mixer_out_qphase) are exhibiting signs of complex high frequency switching transitions

- The high frequency portions are fully filtered out by the third order low-pass filter and clean baseband signals for both in-phase (green) and quadrature purple. Multiple distinct waveforms correspond to different phase transitions matching the delivered digital bitstream.

Dynamic Phase Trajectory

While one variation (single-tone test with static phase transition) would produce a stationary circle, the QPSK Lissajous plot encodes time-varying changes in phase of the modulated digital signal.

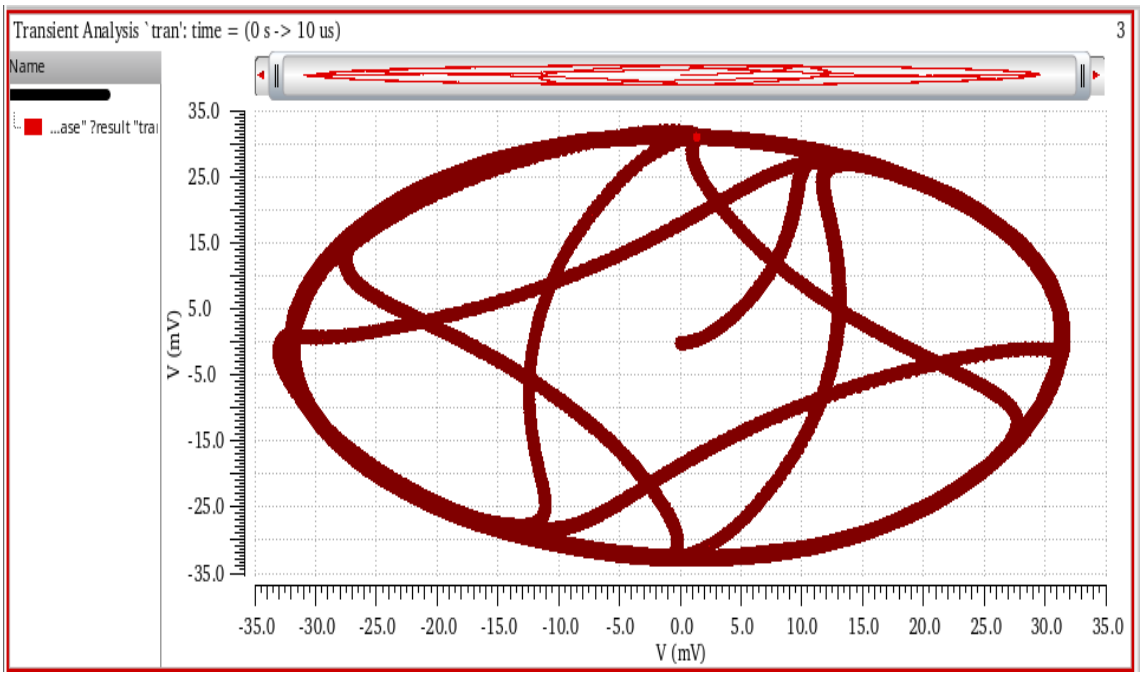

Figure 4.40: Lissajous Pattern for QPSK

- This pattern creation represents the I-channel amplitude vs time and Q-channel amplitude vs time.
- The optical paths arising evidently step from the signal quadrants 4- phase to another. Such symmetry is the key to ensure that the differential mixer correctly maps these sharp digital phase shifts without amplitude clipping and phase distortion.

Signal Integrity and Eye Diagram

Eye Diagram: Eye diagrams are the most important measurement of a quality recovered digital signal, an eye diagram plots several symbol periods on top of each other to show how both channel noise and filter bandwidth impacts the digital pulses.

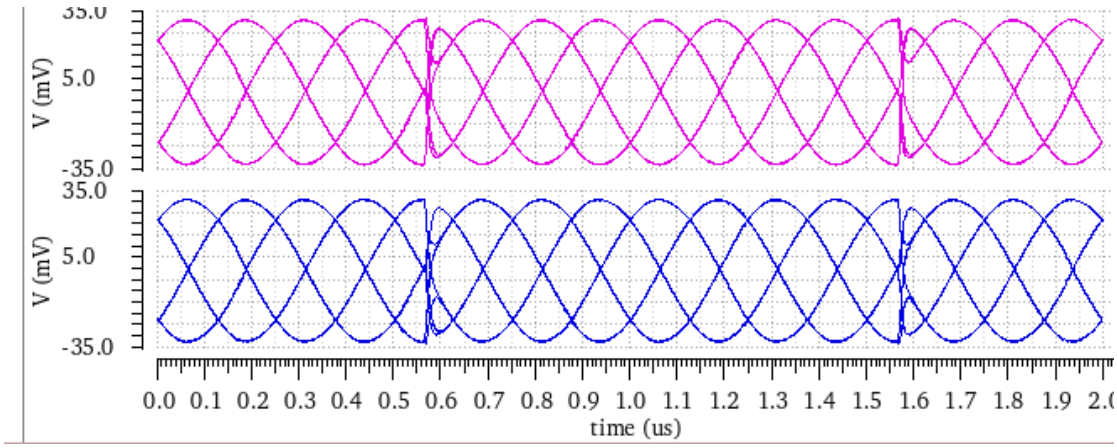

Figure 4.41: Eye Diagram

- The simulated eye diagrams for both the I and Q channels exhibit wide-open eyes.

- A wide-open eye signifies that there is minimal Inter-Symbol Interference (ISI) and extremely low timing jitter in the recovered signal.

- The good signal integrity indicates that the previously determined 20 MHz LPF cut-off is exactly optimized; it successfully attenuates the 2.44 GHz LO leakage and still provides enough bandwidth for the steep QPSK symbol transitions, allowing them to not smear out their edges. As a response, it assures a very accurate digital quantization procedure with nominal BER.

4.6 Comparison Table

Table 9: Comparison Table with Previous Work

Category	Parameter	[11]	[22]	[1]	[23]	[24]	[20]	This Work
Process	Technology (nm)	-	180	600	180	180	40	45
	Supply Voltage (V)	-	1.5	3	1.8	1.5	1.1	1.2
System	Frequency (GHz)	2.4	24	2.4	24	2.42	-	2.45
	Total Gain (dB)	35	14.5	20-Dec	25	-	-	400
	Total Power (mW)	40	45	100	25.2	-	-	6.261
LNA	Gain (dB)	-	15	14	14.7	-	-	23.03
	NF (dB)	-	6	3.5	4.3	-	-	2.4
	Topology	-	Common Gate	Common Source Cascode	Transformer-Coupled	-	-	Common Source Inductive Degeneration
Mixer	Conv. Gain (dB)	-	12.5	10	8.7	-	-	
	Type	-	Active Gilbert Cell	Active Gilbert Cell	Current Bleeding Mixer	-	-	Active Gilbert Cell
BPF	Bandwidth (MHz)	-	-	-	-	38	-	20-100 (Tunable)

	Power Consumption (mW)	-	-	-	-	1.3 (Single Stage)	-	1.63 (Differential)
LPF	Bandwidth (MHz)	-	-	-	-	-	20	20
	Power Consumption (mW)	-	-	-	-	-	2	0.2

Chapter 5

Evidence of Complex Engineering Problem and PO Mapping

1. **Multifaceted Design Challenge:** The project entails designing a high-performance 2.45 GHz superheterodyne RF receiver for wireless applications, gaining real-world experience in dealing with issues like interference, signal integrity, noise and power consumption within the crowded ISM band.

2. **Advanced Analytical Approach:** Addressing selectivity, efficiency & linearity concerns e.g. Fundamentals of Engineering, Circuit Theory & Systems-Level Simulation.

3. **Simulation-Driven Optimization:** Industry EDA tools are used for optimizing their blocks and device performance at a system level, some examples are Cadence Virtuoso and SpectreRF. Iterative tuning (IT) shown gain, noise figure, impedance matching and frequency translation.

4. **Program Outcomes Alignment:** The project solutions approach transverses each of the program and accreditation requirements as represented via PO2 (Extensive Knowledge), PO3 (Originality), PO4 (Rigorous Investigation) and PO5 (Expert Tool usage)

5. **Societal and Sustainability Impact:** The designs ensure reliable IoT, smart infrastructure, simulation- based development (less environmental damage) and align with SDGs related to industry innovation and sustainable cities.

5.1 Complex of Engineering Problem

Table 10: Complex Problem (P) Mapping

P	Attribute	Description
P1	Depth of knowledge	RF transistor modeling would benefit from a more in-depth analysis. This would not be possible without combining specialist

	required	knowledge (K4) and engineering design (K5).
P2	Range of conflicting requirements	There are trade-offs: between Gain and Bandwidth, between Noise figure and power consumption, between Linearity and efficiency. Example: improving gm for noise performance requires higher bias current.
P3	Depth of analysis required	There are many solutions. We can choose optimal topology according to our need. Example: for LPF, there are passive filters, active GM-C filters, OTA-C filters etc. For LNA, there are inductive source degeneration, differential LNA etc.
P6	Extent of stakeholder involvement and conflicting requirements	This project involves conflicting needs among semiconductor company, device manufacturers and regulatory bodies like BTT (requiring strict 2.45 GHz). Resolving the conflict between high data rate and low power consumption was a primary stakeholder driven challenge.
P7	Interdependence	The RF receiver is a high-level system where the LNA, BPF, Mixer and LPF are interdependent. A change in one block directly affects the next and previous stage. Example: A change in LNA gain affects linearity and LPF input level.

5.1 PO Mapping

Table 11: PO Mapping

Sl. No.	Name of topics	Field	Description of applicable portion of our project
1	Engineering Knowledge	Engineering Fundamental	Engineering Knowledge Engineering Fundamental In the design of the receiver, basic electronics and RF such as MOSFET operation, impedance matching, and RF signal amplification were applied
2	Problem Analysis	Engineering Specialization	Problem Analysis Engineering Specialization Focusing on the coupled factors that shape a 2.45-GHz ISM radio spectrum, such as interference, weak signal strength detection, or noise.
3	Design and Development of Solutions	Engineering Specialization	Design and Development of Solutions Engineering Specialization For efficient signal processing, a complete RF receiver chain was designed with 50Ω impedance matching. It includes Low Noise Amplifier (LNA), Band Pass

			Filter, Mixer, and Low Pass Filter.
4	Investigation	Engineering Specialization	Investigation Engineering Specialization Research work at the current level mainly consisted on gaining an insight into circuit simulations and RF performance analysis. These clues hint the field as follows: gain, noise behavior, frequency response, and signal conversion.
5	Modern Tool Usage	Engineering Specialization	Modern Tool Usage Engineering Specialization Receiver block design was done using Cadence Virtuoso for schematic drawing & RF simulation purposes, and SpectreRF as well. Cadence SpectreRF now provides different displays, so the nomenclature here had to be omitted in order to avoid conflation with a particular product brand or company.
6	Engineer and Society	Engineering Specialization	Engineer and Society Engineering Specialization With its applications in

			wireless communication systems such as IoT devices, smart homes, and healthcare monitoring technologies, the receiver design will become a major asset.
7	Environment and Sustainability	Engineering Specialization	Environment and Sustainability Engineering Specialization Circuit design by means of simulation techniques has reduced the need for physical prototyping. This is beneficial to both environmental protection and ecological maintenance since it will save resources in construction materials.
8	Ethics	Engineering Fundamental	Ethics Engineering Fundamental We strictly followed the principles of ethical engineering: we ran accurate simulations, wrote good references, and followed a responsible research methodology.
9	Individual and Team Work	Engineering Fundamental	Individual and Team Work Engineering Fundamental This Research was

			completed through the cooperation of a number of members: different parts were taken by different persons in the design, simulation and analysis at the same time. Working together also helps with documentation.
10	Communication	Engineering Fundamental	Communication Engineering Fundamental Reports, presentations and poster demonstrations were used to communicate the technical findings and design results during defense of the project
11	Project Management and Finance	Engineering Fundamental	Project Management and Finance Engineering Fundamental All project tasks, such as design, simulation scheduling and reporting, went well and were finished on schedule by that strength of the group.
12	Life-long Learning	Engineering Fundamental	Life-long Learning Engineering Fundamental This project not only required continuous learning of RF circuit design techniques and advanced

			simulation tools, it also needed research papers on wireless receivers that were related to the topic.

Chapter 6

Conclusion

This work is to create a modular, simulation-guided design flow for the RF receiver optimized at 2.45 GHz in ISM band. The Relationship between these key requirements, selectivity, noise performance (low-noise and high sensitivity), and power include by employing industry-standard EDA tools and systematic block-level optimization, the design achieves good front-end performance which can be integrated in wireless telecommunications products or IOT device development. There are all the major receiver stages, including the band-pass filter, low-noise amplifier (LNA), mixer, and low-pass filter to meet strict technical requirements. They concluded from simulation results that the proposed architecture has strong interference rejection, gain stability, and noise minimization under any circumstance supporting the effectiveness of the design methodology. By minimize physical prototyping and maximizing simulation as feedback, the methodology is very adaptable and sustainable while at the same time aligning with responsible engineering practices Through efficient use of resources. The fact that this work aligns with the program outcomes and Sustainable Development Goals further indicates its relevance for modern communication systems and society. This validated design and simulation will be applied to multi-band reconfigurable receiver architectures as well as silicon implementation of complex systems. This paper establishes a bridge between current research into high- performance, energy-efficient wireless receiver architectures with advanced applications both in industry and academia.

References

[1] B. Razavi, "CMOS RF receiver design for wireless LAN applications," *1999 IEEE Radio Wirel. Conf. (RAWCON 99)*, 1999.

[2] S. Triapthi and others, "Design of RF Receiver Front End Subsystems With Low Noise Amplifier and Active Mixer," *Def. Sci. J.*, vol. 70, no. 6, pp. 633–641, 2020.

[3] H. Shin and others, "Circuit-Centric Genetic Algorithm for the Optimization of a Radio-Frequency Receiver," *Electronics*, vol. 14, no. 4, p. 770, 2025.

[4] A. Michailidis and others, "A Unified Design Methodology for Front-End RF/mmWave Receivers," *Electronics*, vol. 14, no. 2, p. 235, 2025.

[5] C.-T. Hsiao, "Design of a 2.4 GHz CMOS LNA for Bluetooth low energy application using 45 nm technology," San Jose State University, 2017.

[6] M. Mudavath and K. H. Kishore, "Design and analysis of receiver front-end of CMOS cascode common source stage with inductive degeneration low noise amplifier on 65 nm technology process," *J. Comput. Theor. Nanosci.*, vol. 16, no. 5–6, pp. 2628–2634, 2019.

[7] E. Klumperink and B. Nauta, "N-path filters and mixer-first receivers–a review," in *IC Design Insights-from Selected Presentations at CICC 2017*, 2022, pp. 221–264.

[8] N. Poobuapheun, "LNA and mixer designs for multi-band receiver front-ends," University of California, Berkeley, 2009.

[9] V. Kumar, R. Mehra, and A. Islam, "A 2.5 GHz Low Power, High-Q, Reliable Design of Active Bandpass Filter," *IEEE Trans. Device Mater. Reliab.*, vol. 17, no. 1, pp. 229–244, 2017.

[10] D. MA, "Rf receivers system and circuits," 2011.

[11] M. Al-Rawi, "Design of 2.4 GHz Transceiver for Wireless Communication," *L. Forces Acad. Rev.*, vol. 24, no. 3, pp. 232–241, 2019.

[12] E. Sánchez-Sinencio, "665 Receiver Architectures," 2009.

[13] M. A. S. Bhuiyan and others, "A review on CMOS Gm-C band pass filters in RF application," *J. Theor. Appl. Inf. Technol.*, vol. 61, no. 1, pp. 17–23, 2014.

[14] IC-Components, "The Working Principle and Application of Frequency Mixers," 2025.

[15] Wikipedia, "Frequency mixer," 2025.

[16] YouTube, "RF Receiver Principles (8qBpyJxSngo)," 2024.

[17] G. Piccinni, C. Talarico, G. Avitabile, and G. Coviello, “Innovative Strategy for Mixer Design Optimization Based on gm/ID Methodology,” *Electronics*, vol. 8, no. 9, p. 954, 2019.

[18] J. Peters, “LC Filter Design Using Normalized Prototypes,” 2024.

[19] E. Lauwers and G. Gielen, “Systematic design of high-frequency gm-C filters,” in *Analog Circuit Design*, Springer US, 2002, pp. 21–45.

[20] T. B. Kumar and others, “Design Automation of 5-T OTA using gm/ID methodology,” in *2019 IEEE Conference on Information and Communication Technology*, 2019.

[21] X. Wang and others, “A 20–80 MHz continuously tunable Gm-C low-pass filter for ultra-low power WBAN receiver front-end,” *IEEE Access*, vol. 9, pp. 154136–154142, 2021.

[22] X. Guan and A. Hajimiri, “A 24-GHz CMOS Front-End,” *IEEE J. Solid-State Circuits*, vol. 39, no. 2, pp. 368–373, 2004.

[23] C.-Y. Chu and others, “A 24GHz low-power CMOS receiver design,” in *IEEE International Symposium on Circuits and Systems (ISCAS)*, 2025.

[24] A. Bhuiyan, “Design of a Band-Pass Filter in 0,18 $µ$m CMOS for 2,4 GHz Reader-Less RFID Transponder,” *Teh. Vjesn. - Tech. Gaz.*, 2017.

Appendix A

List of Abbreviations

Abbreviation	Full Form
ADC	Analog-to-Digital Converter
AGC	Automatic Gain Control
BPF	Band-Pass Filter
CMOS	Complementary Metal-Oxide-Semiconductor
DC	Direct Current
EVM	Error Vector Magnitude
fLO	Local Oscillator Frequency
fIF	Intermediate Frequency
fRF	Radio Frequency
IC	Integrated Circuit
IF	Intermediate Frequency
IoT	Internet of Things
IP3	Third-Order Intercept Point
LNA	Low Noise Amplifier
LO	Local Oscillator
LPF	Low-Pass Filter
NF	Noise Figure
PCB	Printed Circuit Board
PDK	Process Design Kit
QAM	Quadrature Amplitude Modulation
QPSK	Quadrature Phase Shift Keying
RF	Radio Frequency
SNR	Signal-to-Noise Ratio
SoC	System on Chip
VCO	Voltage-Controlled Oscillator
VSWR	Voltage Standing Wave Ratio
WLAN	Wireless Local Area Network
5G	Fifth Generation Mobile Network

List of Symbols

Symbol	Description
f	Frequency
f_{RF}	Radio Frequency
f_{IF}	Intermediate Frequency
f_{LO}	Local Oscillator Frequency
P_{in}	Input Power
P_{out}	Output Power
NF	Noise Figure
IP_3	Third-Order Intercept Point
V_{DD}	Supply Voltage
V_{DC}	DC Voltage
V_{DS}	Drain-Source Voltage
V_{GS}	Gate-Source Voltage
I_D	Drain Current
P_{DC}	DC Power
G	Gain
S_{11}, S_{21}	S-Parameters (Input Reflection, Forward Transmission)
w	Channel Width
λ	Wavelength
ω	Angular Frequency